MD1B

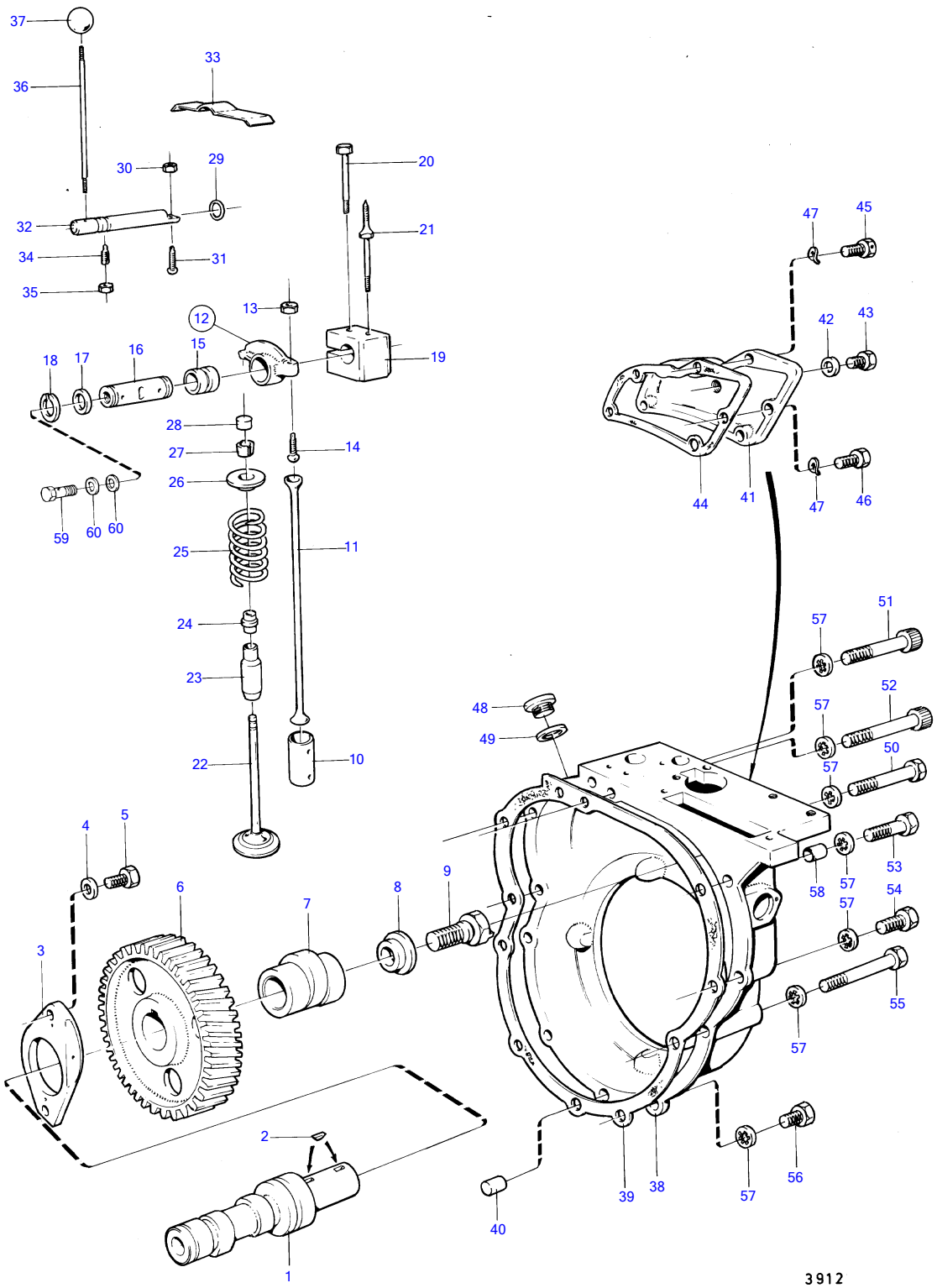
37
36
33
30
29
20
32
21
34
31
35
13
12
15
16
17
18
19
28
27
14
26
59
60
60
25
11
24
23
22
10
47
45
42
43
44
41
47
46
51
57
52
57
48
49
50
57
4
5
6
7
8
9
58
57
53
54
57
3
55
57
2
39
38
57
56
40
1
3912

MD1B

| REF | PART NO. | QTY | DESCRIPTION | SEE SEC. | NOTES |
|---|---|---|---|---|---|
| 1 | (833162) | 1 | Camshaft | | Obsolete part |
| 2 | (910121) | 2 | Woodruff key | | Obsolete part |
| 3 | (405079) | 1 | Flange | | Obsolete part |
| 4 | (15256) | 2 | Washer | | Obsolete part |
| 5 | 955296 | 2 | Hexagon screw | | |
| 6 | (405026) | 1 | Gear | | Obsolete part |
| 7 | (833485) | 1 | Cam disc | | Obsolete part |
| 8 | (803348) | 1 | Guide washer | | Obsolete part |
| 9 | (807031) | 1 | Screw | | Obsolete part |
| 10 | 807393 | 2 | Tappet | | |
| 11 | 403130 | 2 | Push rod | | |
| 12 | (403561) | 1 | Rocker arm, intake | | Obsolete part |
| | (803247) | 1 | Rocker arm, exhaust | | Obsolete part |
| 13 | (955800) | 2 | ・Hexagon nut | | Obsolete part |
| 14 | 403155 | 2 | ・Ball stud | | |
| 15 | (18146) | 2 | ・Bushing | | Obsolete part |
| 16 | (833222) | 1 | Rocker arm shaft | | Obsolete part |
| 17 | (191173) | 4 | Shim | | TH=0.7mm, Obsolete part |
| 18 | (914452) | 2 | Snap ring | | Obsolete part |
| 19 | (833223) | 1 | Bearing box | | Obsolete part |
| 20 | 955300 | 1 | Hexagon screw | | |
| 21 | (833569) | 1 | Screw | 13743 | Obsolete part |
| 22 | 833188 | 1 | Valve | | |
| | 829620 | 1 | Exhaust valve | | Early type of exhaust valve + valve seal is replaced by 829620. |
| 23 | 419653 | 1 | Valve guide, intake | 13743 | |
| | 829867 | 1 | Guide sleeve, exhaust | 13743 | |
| 24 | 1306630 | 1 | Valve stem seal, intake | | (833347) |
| 25 | 829622 | 2 | Valve spring | | (403387) |
| 26 | 403314 | 2 | Valve spring washer | | |
| 27 | 403315 | 4 | Lock | | |
| 28 | 896580 | 2 | Valve cap | | |
| 29 | 925053 | 1 | O-ring | | |
| 30 | (955800) | 1 | Hexagon nut | | Obsolete part |
| 31 | 403155 | 1 | Ball stud | | |
| 32 | | 1 | shaft | | Replaced by 1ea 833499 + 1ea 945292 + 1ea 940344., MO-18708 |
| | (833499) | 1 | Shaft | | Obsolete part, MO 18709- |
| 33 | (803604) | 1 | Spring | | Obsolete part |
| 34 | (919118) | 1 | Set screw | | Obsolete part |
| 35 | 955781 | 1 | Hexagon nut | | |
| 36 | (897390) | 1 | Stud | | Obsolete part, MO-18708 |
| | 945292 | 1 | Stud | | MO 18709- |
| 37 | (807042) | 1 | Ball | | Obsolete part, MO-18708 |
| | 940344 | 1 | Wing nut | | MO 18709- |
| 38 | (833183) | 1 | Timing gear casing | | Obsolete part |
| 39 | 803360 | 1 | Gasket | | |
| 40 | 950586 | 2 | Pin | 13754 | |
| 41 | | 1 | cover | | Replaced by 1ea 833766 + 1ea 957175 + 1ea 16322., MO-22018 |
| | (833766) | 1 | Hatch | | Obsolete part, MO 22019- |
| 42 | 957175 | 1 | Gasket | | MO 22019- |
| 43 | (16322) | 1 | Plug | | Obsolete part, MO 22019- |
| 44 | 897327 | 1 | Gasket | | |
| 45 | 192356 | 1 | Hexagon screw | | |
| 46 | 955273 | 4 | Hexagon screw | | |
| 47 | 941906 | 5 | Spring washer | | |
| 48 | | 1 | plug | | Replaced by 1ea 833511 + 1ea 807363., MO-18791 |
| | (833511) | 1 | Plug | | Obsolete part, MO 18792-20599 |
| | (833496) | 1 | Plug | | Obsolete part, MO 20600- |
| 49 | 925065 | 1 | O-ring | | MO-18791 |
| | 807363 | 1 | Sealing ring | | MO 18792-20599 |
| | 957191 | 1 | Gasket | | MO 20600- |
| 50 | (192357) | 1 | Screw | | Obsolete part, L=115mm |
| 51 | (945295) | 1 | Screw | | Obsolete part, L=110mm |
| 52 | (943795) | 1 | Hex. socket screw | | Obsolete part, L=130mm |
| | | | | | |

MD1B

| REF | PART NO. | QTY | DESCRIPTION | SEE SEC. | NOTES |
|---|---|---|---|---|---|
| 53 | (946408) | 1 | Screw | | Obsolete part, L=75mm |
| 54 | 955324 | 1 | Hexagon screw | | L=60mm |
| 55 | 955332 | 1 | Hexagon screw | | L=120mm |
| 56 | 955318 | 2 | Hexagon screw | | L=30mm |
| 57 | 940109 | 8 | Toothed washer | | |
| 58 | 943835 | 1 | Plug | | |
| 59 | 74033 | 1 | Hollow screw | 13744 | |
| 60 | 957171 | 2 | Gasket | | |