DP-D

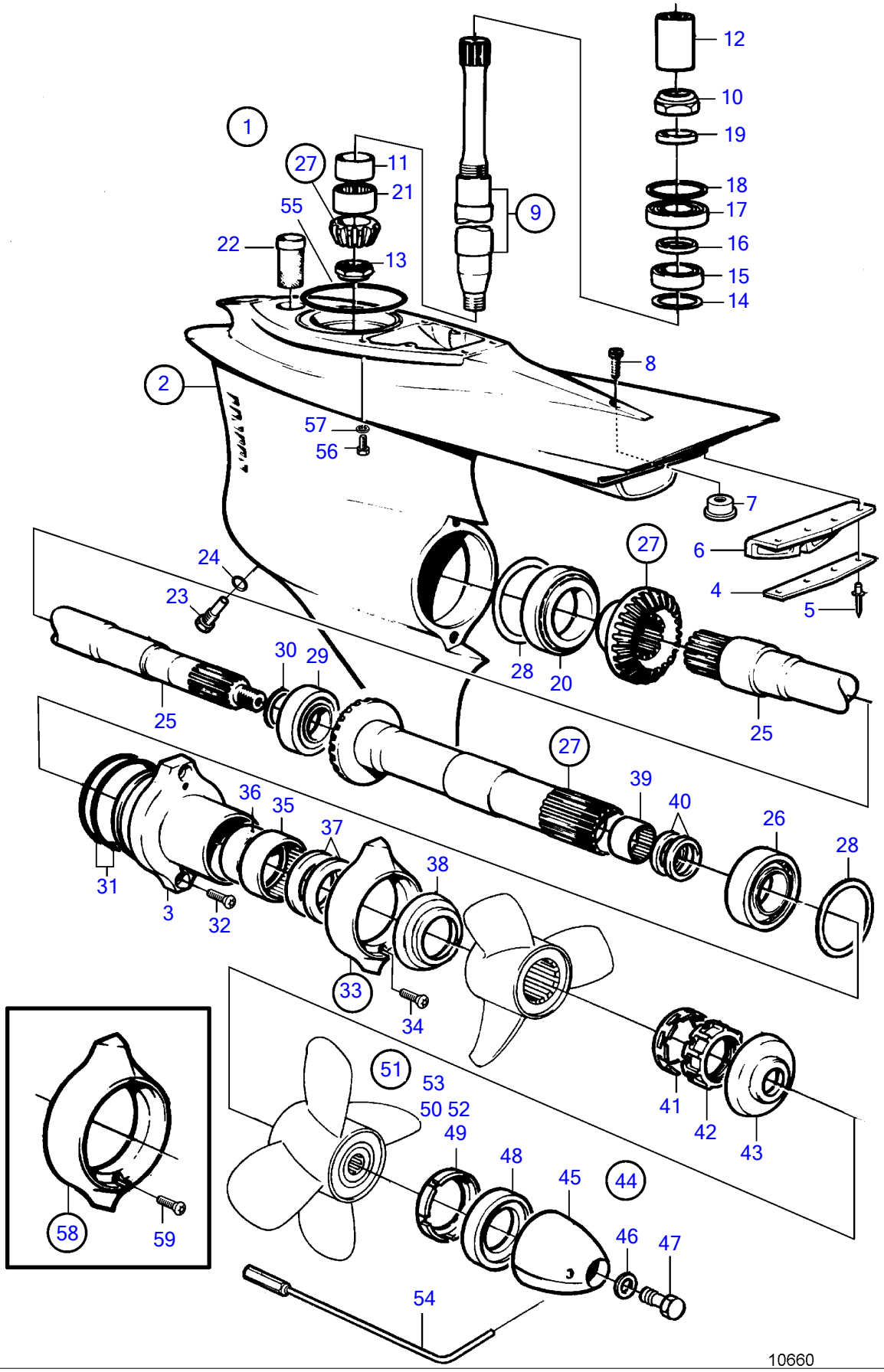
1
2
3
4
5
6
7
8
9
10
11
12
13
14
15
16
17
18
19
20
21
22
23
24
25
26
27
28
29
30
31
32
33
34
35
36
37
38
39
40
41
42
43
44
45
46
47
48
49
50 52
51
53
54
55
56
57
58
59
10660

DP-D

REF	PART NO.	QTY	DESCRIPTION	SEE SEC.	NOTES
1	872769	1	Lower gear		Also available as an exchange part., Ratio 1,78:1
2	872307	1	· Gear housing		
3	854053	1	· · Bearing housing		
4	872439	1	· · Attaching plate		
5	977711	4	· · Blind rivet		
6	872438	1	· · Check valve		
9	854611	1	· Countershaft		
10	969071	1	· · Round nut		
11	184682	1	· · Inner ring		
12	854553	1	· · Splined sleeve		
			Bulletin P-44-1-6	P-44-1-6-EN	Lower Gear Unit
13	852212	1	· Nut		
14	941832	X	· Shim		TH=0,05mm
	941833	X	· Shim		TH=0.20mm
15	183374	1	· Ball bearing		
16	944970	X	· Shim		
17	11072	1	· Roller bearing		
18	944522	X	· Shim		TH=0,05mm
	42981	X	· Shim		TH=0,10mm
	968057	X	· Shim		TH=0.20mm
	42980	X	· Shim		TH=0.35mm
19	897387	1	· Tensioning ring		
20	11044	1	· Roller bearing		
21	184654	1	· Needle roller bushin		
22	814482	1	· Oil strainer		
23	852904	1	· Magnetic plug		
24	955974	1	· O-ring		
25	872533	1	· Propeller shaft		
26	184765	1	· Roller bearing		
27	854464	1	· Gear set		Ratio 1,78:1
28	967352	X	· Shim		TH=0,05mm
	941823	X	· Shim		TH=0,10mm
	967351	X	· Shim		TH=0.15mm
	941824	X	· Shim		TH=0.20mm
	941825	X	· Shim		TH=0.40mm
29	184691	1	· Roller bearing		
30	191834	X	· Shim		TH=0,10mm
	191835	X	· Shim		TH=0.15mm
	191837	X	· Shim		TH=0.25mm
31	925258	2	· O-ring		
32	941812	2	· Hex. socket screw		
33	875821	1	· Zinc ring kit		
34	966808	2	· · Screw		
35	183859	1	· Needle roller bushin		
36	184683	1	· Inner ring		
37	851407	2	· Sealing ring		
38	872871	1	· Thrust ring		Front
39	183272	1	· Needle roller bushin		
40	853871	1	· Sealing ring		
42	873049	1	· Propeller nut		
43	872872	1	· Thrust ring		Rear
44	872549	1	· Spinner		
45		1	· · Propeller cone		
46	943194	1	· · Washer		
47	872546	1	· · Lock screw		M12
48	853676	1	· · Spacer ring		
49	854294	1	· · Plastic washer		
51	854667	1	· Spare parts kit		
52	854294	1	· · Plastic washer		
54	873058	1	· Tool kit		For 872549
55	925256	1	O-ring		Included in complete Duoprop drive unit.
56	941810	4	Hex. socket screw		Included in complete Duoprop drive unit.
57	853095	4	Washer		Included in complete Duoprop drive unit.

DP-D

REF	PART NO.	QTY	DESCRIPTION	SEE SEC.	NOTES
58	876138	1	Anode kit		To be used in fresh-water.
59	966808	2	▪ Screw		