Air Venting System for one and two circut Keel Cooling

D5A-A T, D5A-A TA

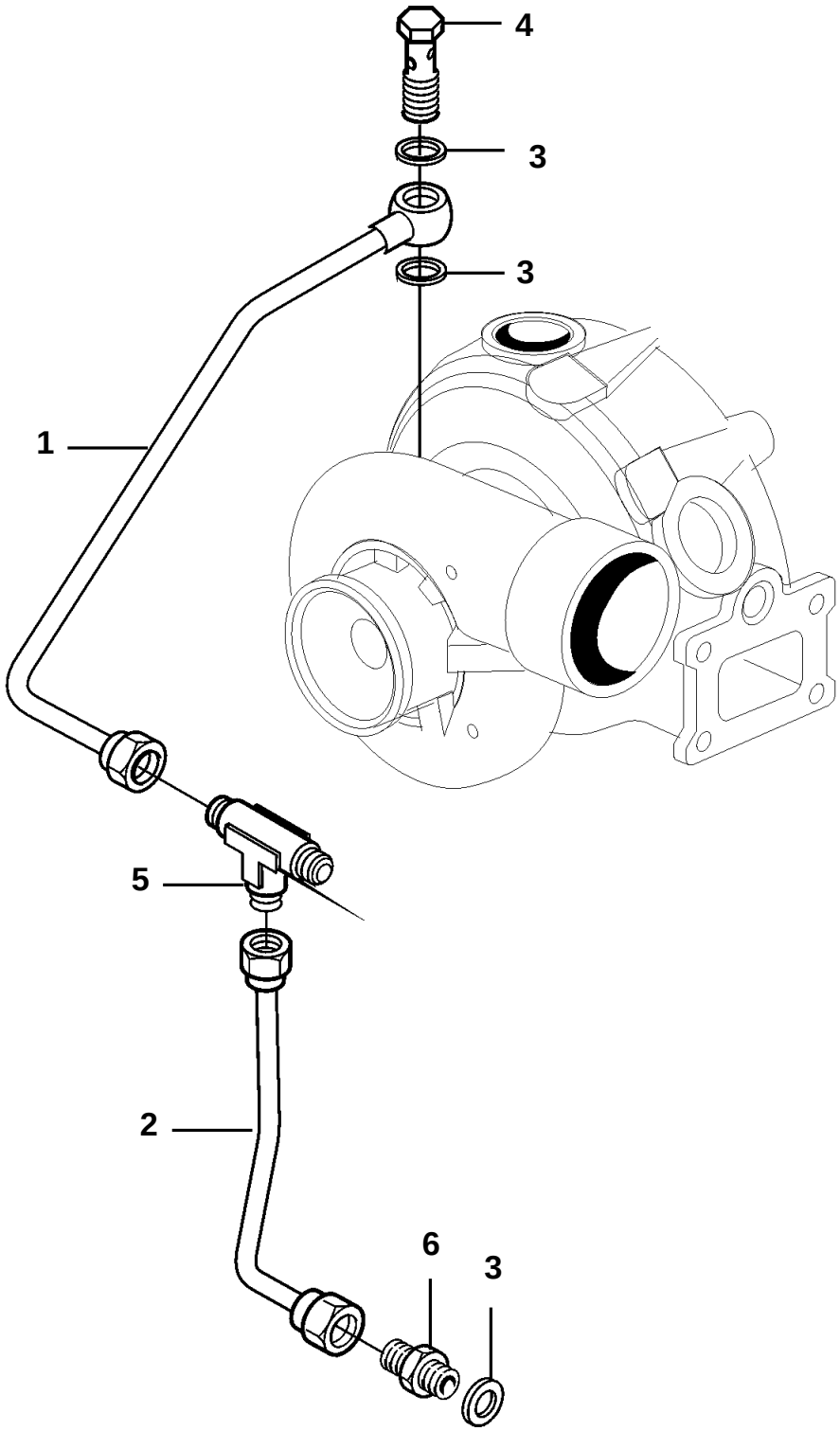

19828

D5A-A T, D5A-A TA

REF	PART NO.	QTY	DESCRIPTION	
1	888895	1	Breather pipe	
2	888826	1	Breather pipe	
3	947281	3	Gasket	
4	980973	1	Hollow screw	
5	888828	1	T-nipple	
6	888829	1	Nipple, cylinder head	