INLET AND EXHAUST MANIFOLD AND INSTALLATION COMPONENTS: TAMD41B

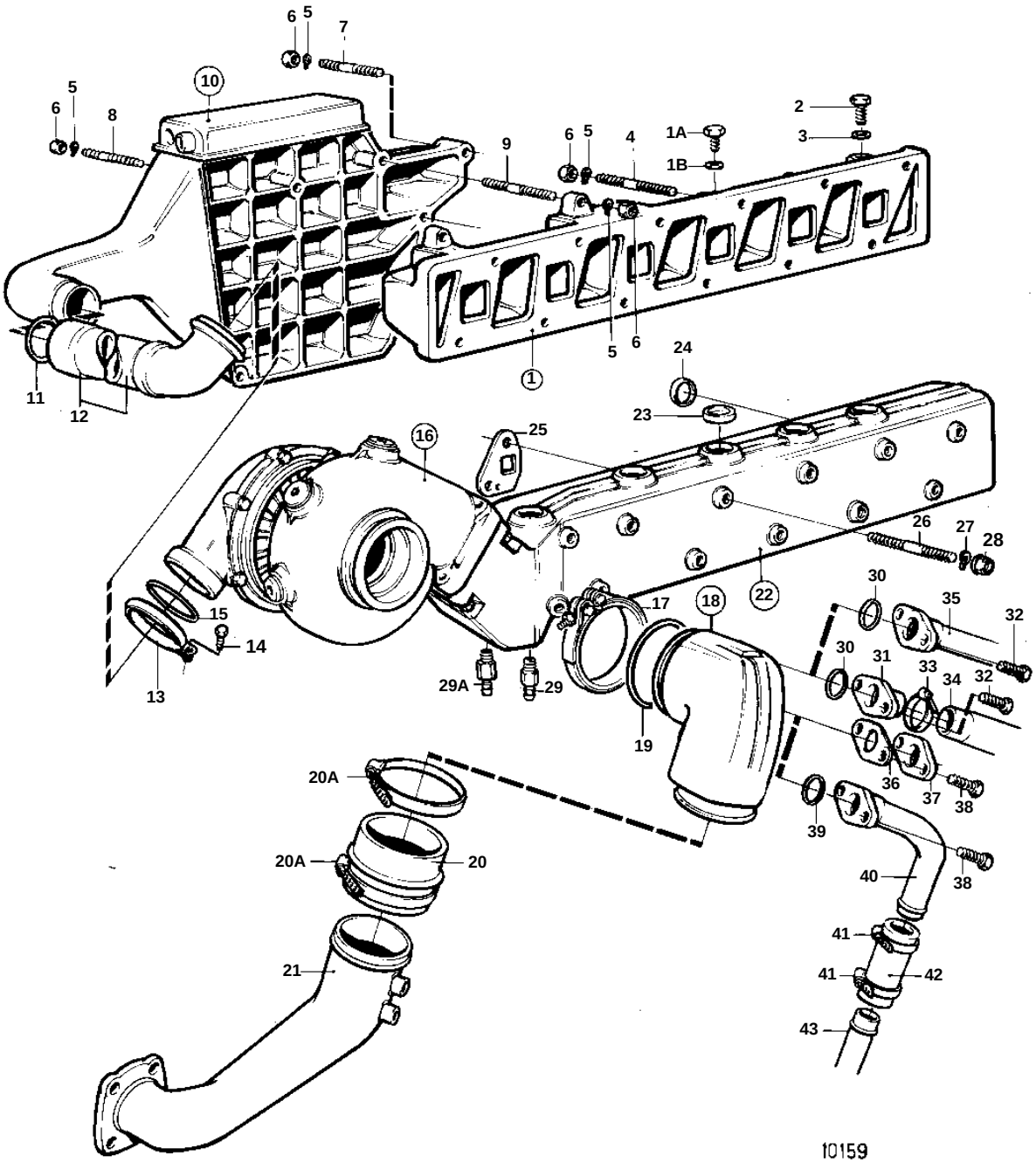

REF	PART NO.	QTY	DESCRIPTION		SEE SEC.	NOTES
1	859300	1	Inlet pipe			
1A	960634	4	· Plug			
1B	947627	4	· Gasket			
2	960632	1	Plug			
3	947624	1	Gasket			
4	924068	9	Stud			L = 50 MM
	17942	1	Stud			L = 110 MM
5	941907	13	Spring washer			
6	945408	13	Flange nut			
7	17942	1	Stud			L = 110 MM
8	838854	1	Stud			L = 185 MM
9	953049	1	Stud			L = 50 MM
10		1	AFTER COOLER			
					02B-2430	
11	471449	1	Sealing ring			
12	838693	1	Connection pipe			
13	838864	1	Clamp			
14	947542	1	Screw			
15	967944	1	O-ring			
16		1	TURBO		02B-2060	
17	842993	1	Clamp			
18	859963	1	Exhaust riser			
19	859052	1	· Gasket			
22	838687	1	Exhaust pipe			
23	946780	12	· Cap plug			
24	838766	1	Sealing ring			
25	876144	3	Gasket kit			
26	953001	8	Stud			L = 120 MM
	953002	2	Stud			L = 125 MM
	953003	1	Stud			L = 130 MM
	953007	1	Stud			L = 150 MM
27	941908	10	Spring washer			
28	971095	12	Nut			
29	949918	1	Drain cock			
29A	947893	1	Drain cock			
30	842913	1	Sealing ring			
31	858659	1	Hose connection			
32	946544	2	Flange screw			
33	943475	1	Hose clamp			
34	944386	1	Hose			
36	859002	1	Gasket			
37	844093	1	Flange			
38	946544	2	Flange screw			