D41B

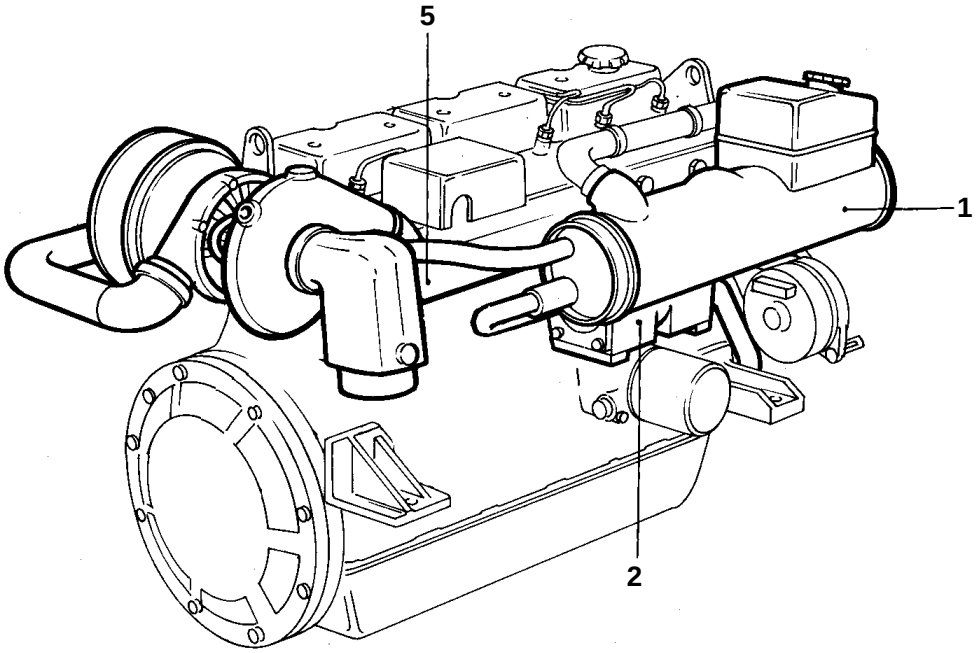

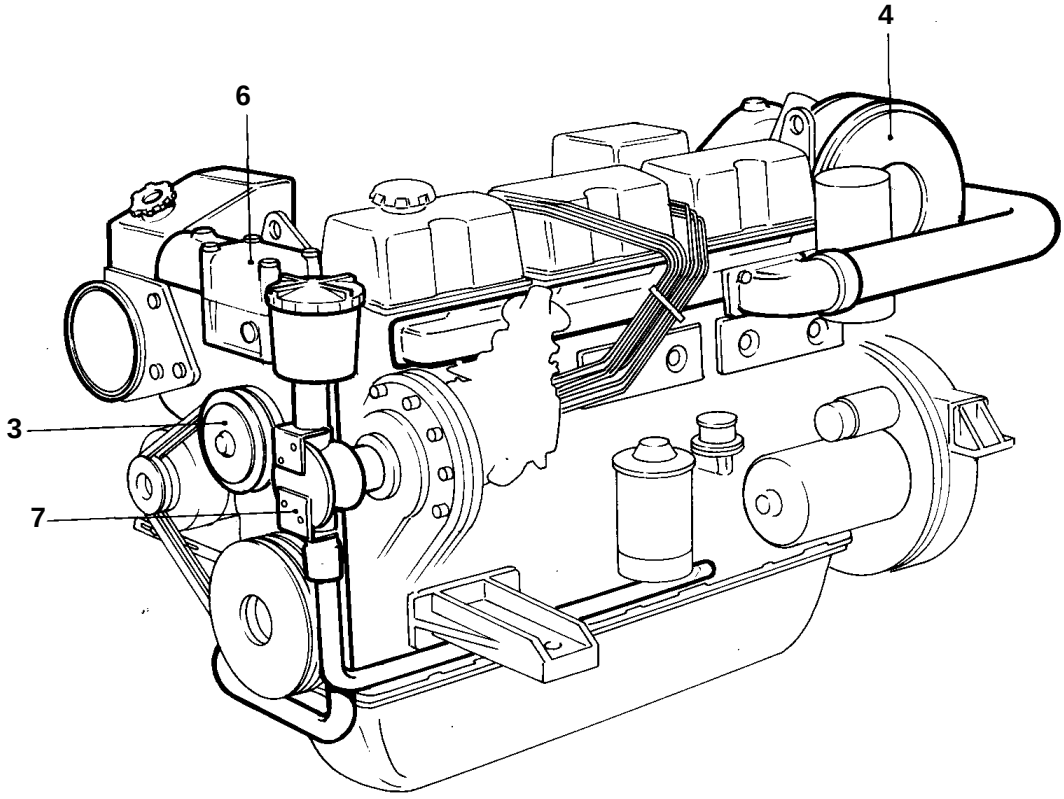

10195

D41B

REF	QTY	DESCRIPTION		SEE SEC.
1	1	HEAT EXCHANGER WITH INSTALLATION COMPONENTS		02B-0930
2	1	OIL COOLER WITH INSTALLATION COMPONENTS		02B-1300
3	1	CIRCULATION PUMP WITH INSTALLATION COMPONENTS		02B-1050
4	1	TURBO AND AIR FILTER WITH INSTALLATION COMPONENTS		02B-2060
5	1	INDUCTION- AND EXHAUST MANIFOLD WITH INSTALLATION COMPONENTS		02B-2330
6	1	THERMOSTAT HOUSING WITH INSTALLATION COMPONENTS		02B-2600
7	1	SEA WATER PUMP WITH INSTALLATION COMPONENTS		02B-1140