TAMD41A

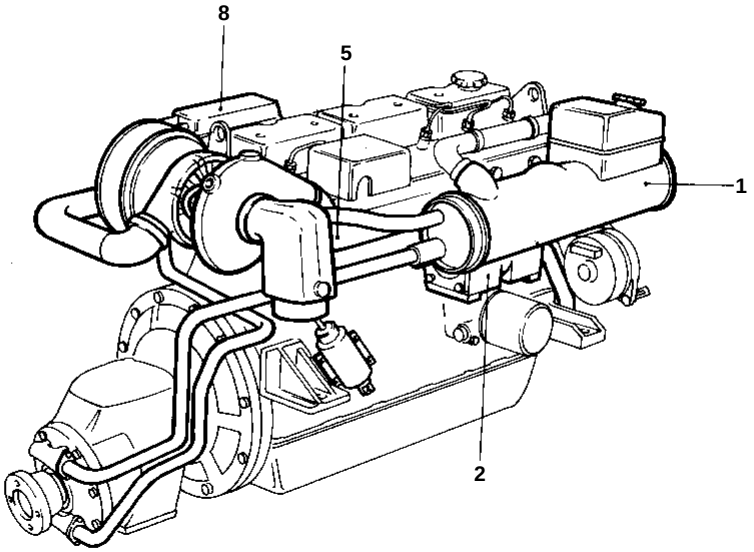

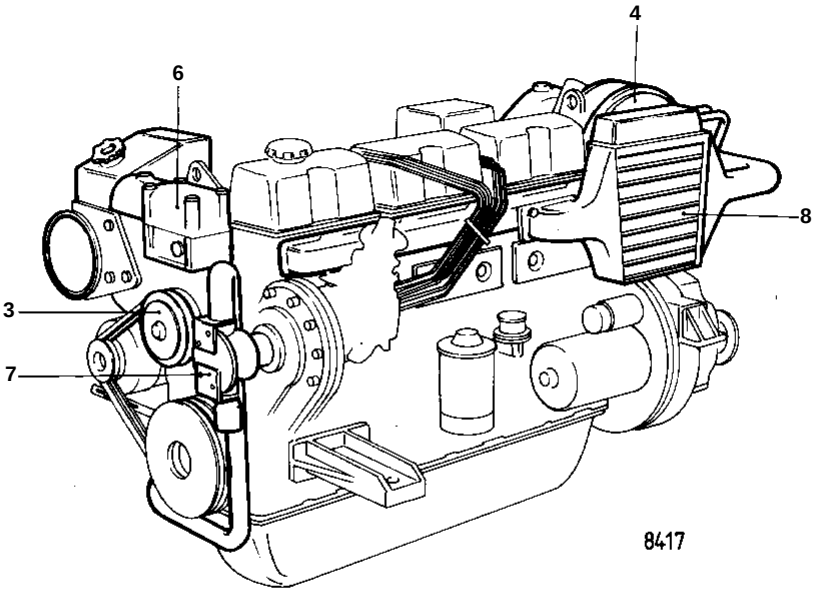

TAMD41A

REF	QTY	DESCRIPTION		SEE SEC.
1	1	HEAT EXCHANGER WITH INSTALLATION COMPONENTS		02B-0870
2	1	OIL COOLER WITH INSTALLATION COMPONENTS		02B-1290
3	1	CIRCULATION PUMP WITH INSTALLATION COMPONENTS		02B-1000
4	1	TURBO AND AIR FILTER WITH INSTALLATION COMPONENTS		02B-2040
5	1	INDUCTION- AND EXHAUST MANIFOLD WITH INSTALLATION COMPONENTS		02B-2350
6	1	THERMOSTAT HOUSING WITH INSTALLATION COMPONENTS		02B-2500
7	1	SEA WATER PUMP WITH INSTALLATION COMPONENTS		02B-1130
8	1	AFTER COOLER WITH INSTALLATION COMPONENTS		02B-2400