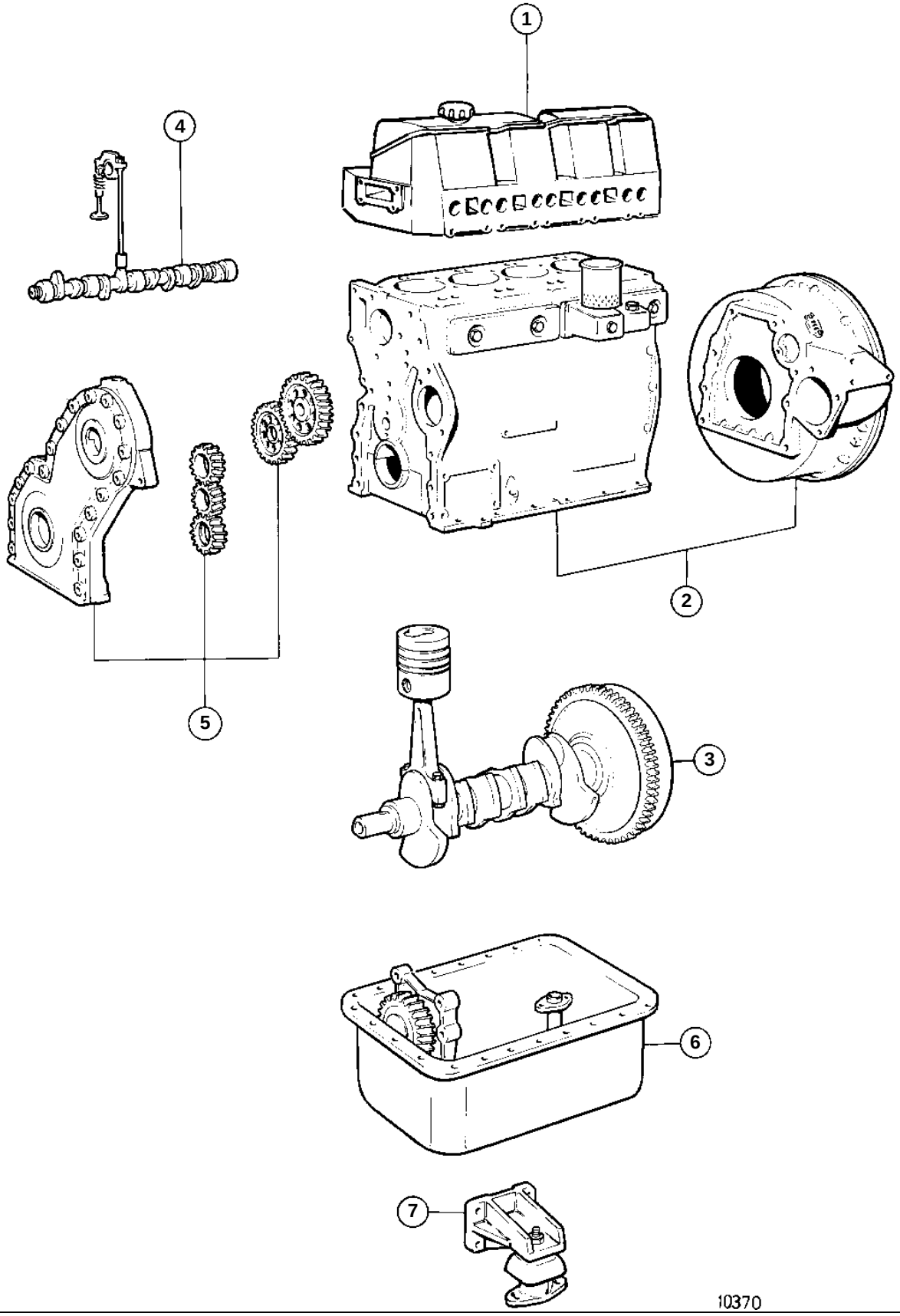
1
2
3
4
5
6
7
10370

REF	QTY	DESCRIPTION		SEE SEC.
1	1	CYLINDER HEAD		02A-2150
2	1	CYLINDER BLOCK AND FLYWHEEL COVER		02A-2450
3	1	CRANKSHAFT AND RELATED PARTS		02A-3050
4	1	CAMSHAFT AND VALVEMECHANISM		02A-3550
5	1	TIMING GEAR COVER AND GEARS		02A-4050
6	1	LUBRICATING SYSTEM		02A-4550
7	1	ENGINE MOUNTS		02A-5450