D13B-F MG

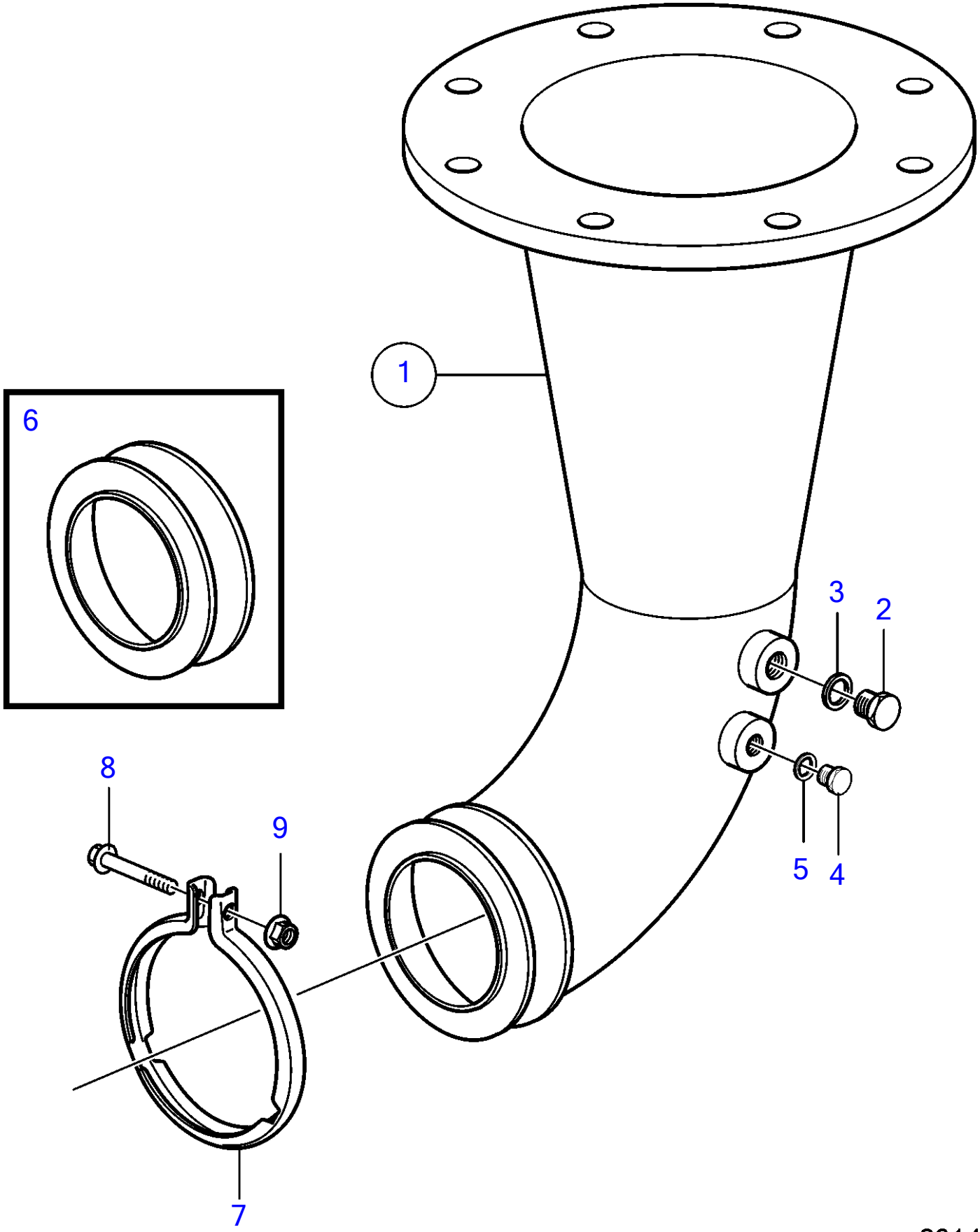

26148

D13B-F MG

REF	PART NO.	QTY	DESCRIPTION
1	21545501	1	Exhaust pipe
2	960630	1	▪ Plug
3	969011	1	▪ Gasket
4	960628	1	▪ Plug
5	947281	1	▪ Gasket
6	21353088	1	Flange
7	21211715	1	V-band clamp
8	973924	1	Flange screw
9	948645	1	Flange lock nut