D13B-F MG

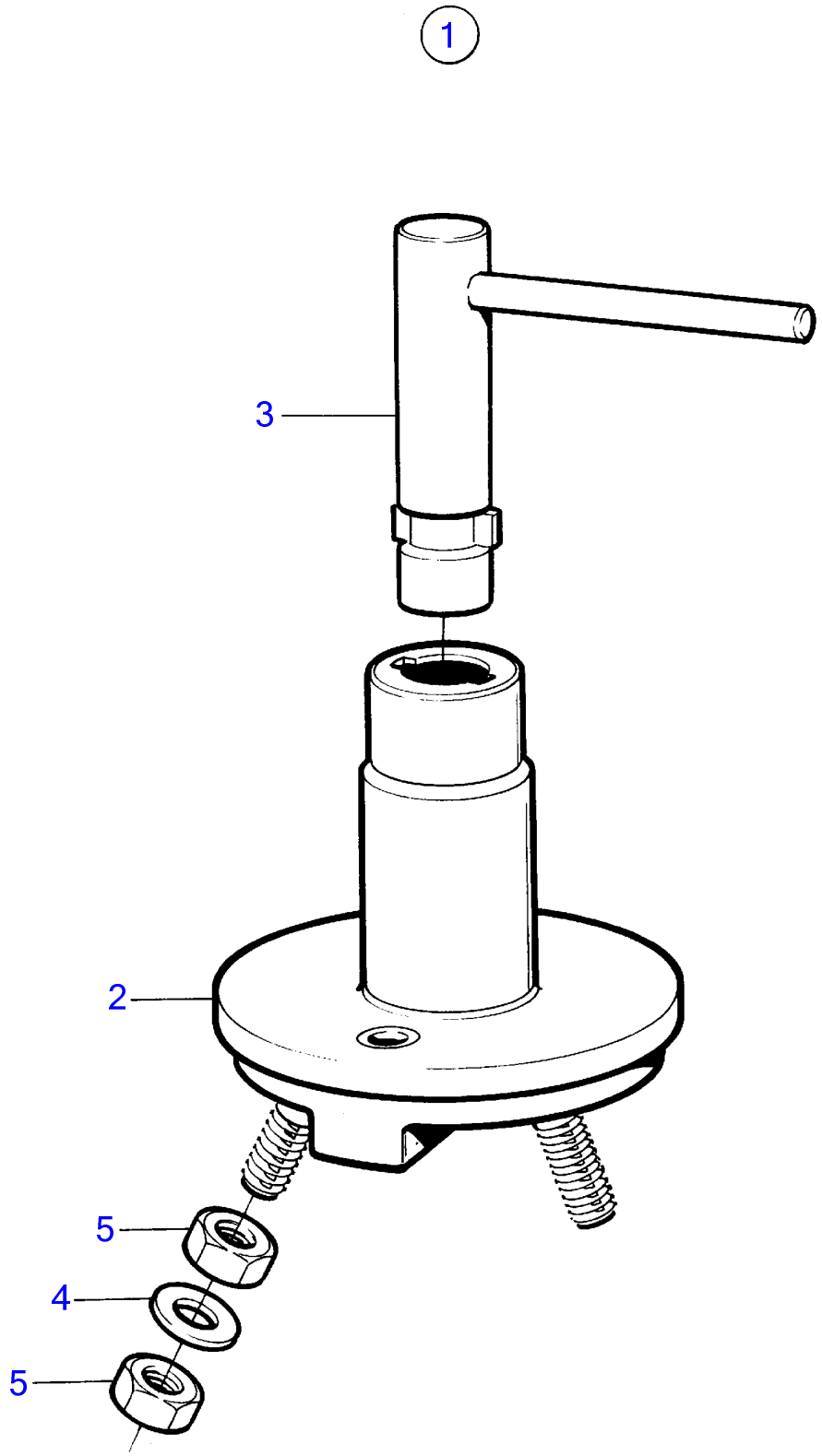

10879

D13B-F MG

REF	PART NO.	QTY	DESCRIPTION	NOTES
1	1140319	1	Battery main switch	150A
	3987034	1	Main switch	300A
2		1	▪ Switch	
3	1140427	1	▪ Cock handle	For 1140319
	8157766	1	▪ Key	For 3987034
4	1140428	2	▪ Washer	
5	17602	4	▪ Hexagon nut	