D13B-A MP

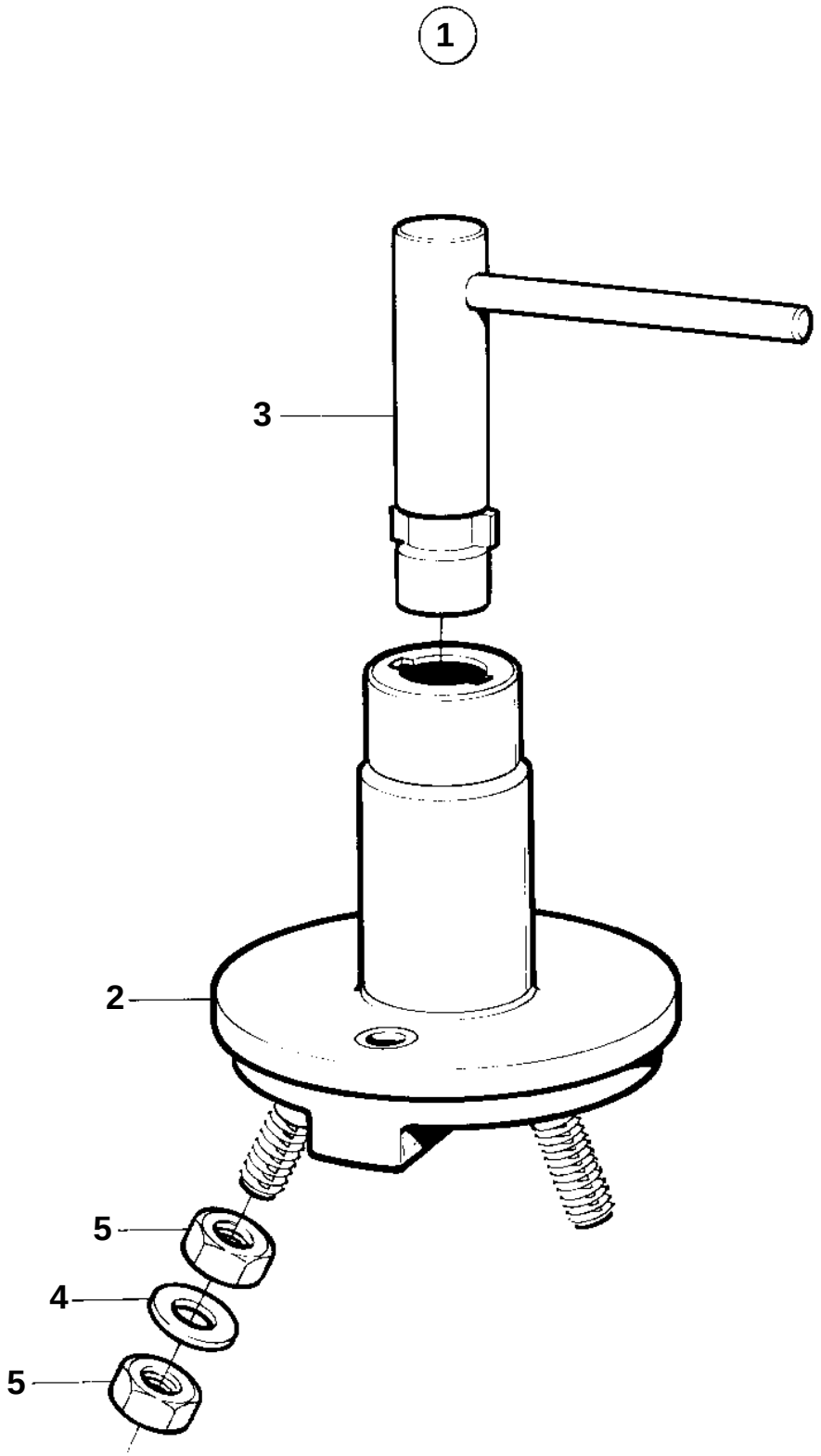

10879

D13B-A MP

REF	PART NO.	QTY	DESCRIPTION	NOTES
1	1140319	1	Battery main switch	150A
	3987034	1	Main switch	300A
2		1	· Switch	
3	1140427	1	· Cock handle	FOR 1140319
	8157766	1	· Key	FOR 3987034
4	1140428	2	· Washer	
5	17602	4	· Hexagon nut	