D13B-A MP

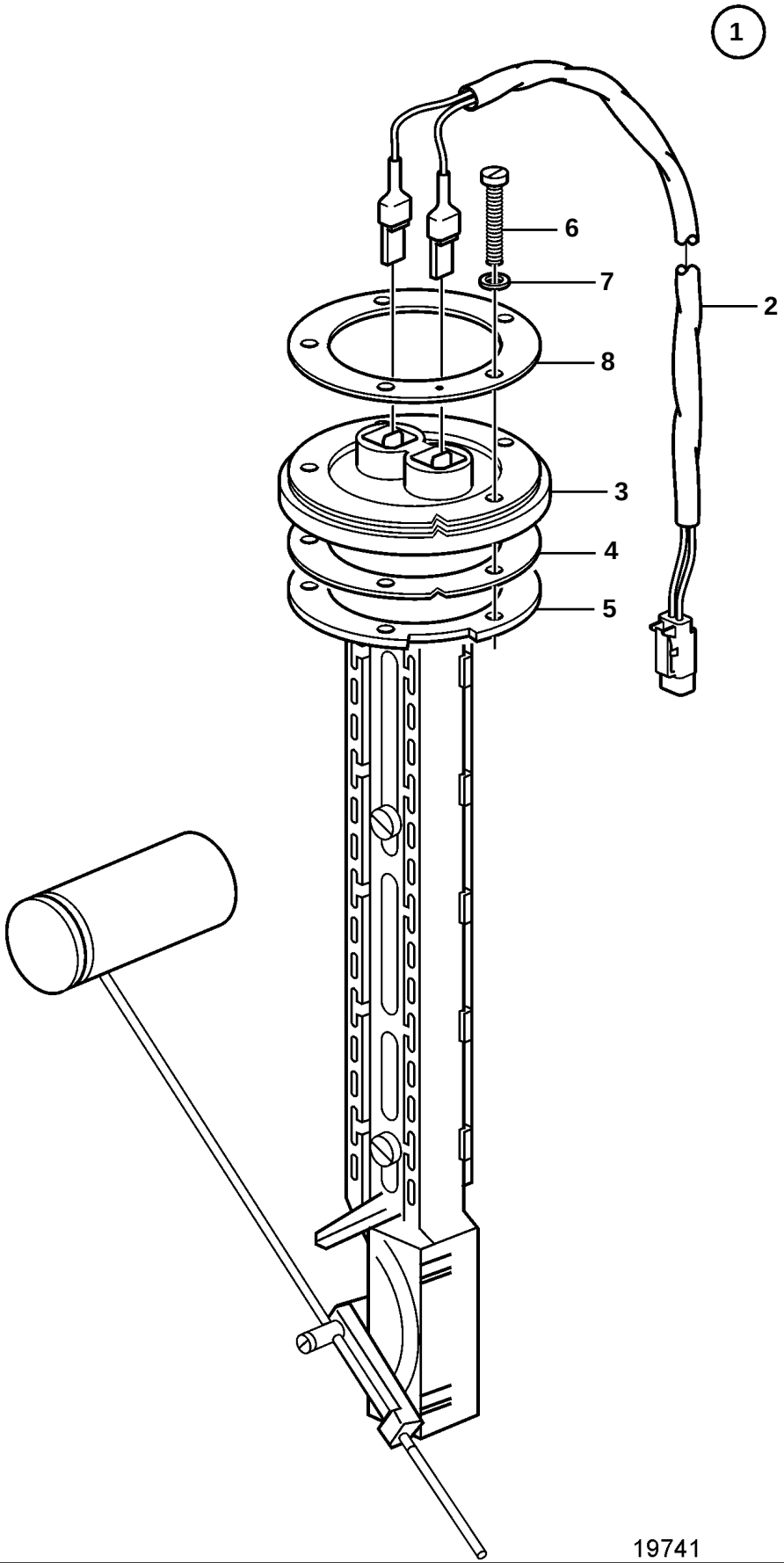

D13B-A MP

REF	PART NO.	QTY	DESCRIPTION	NOTES
1	874840	1	Sensor, set	
2	874807	1	· Cable kit	L=6.0m
3	873772	1	· Tank sensor	
4	89865	1	· · Gasket	
5	834480	1	· · Flange	
6	969407	4	· · 6 point socket screw	L=16mm
				(956078)
	956081	1	· · Cross recessed screw	L=25mm
7	834481	5	· · Gasket	
8		1	· · Flange	