D12D-A MG

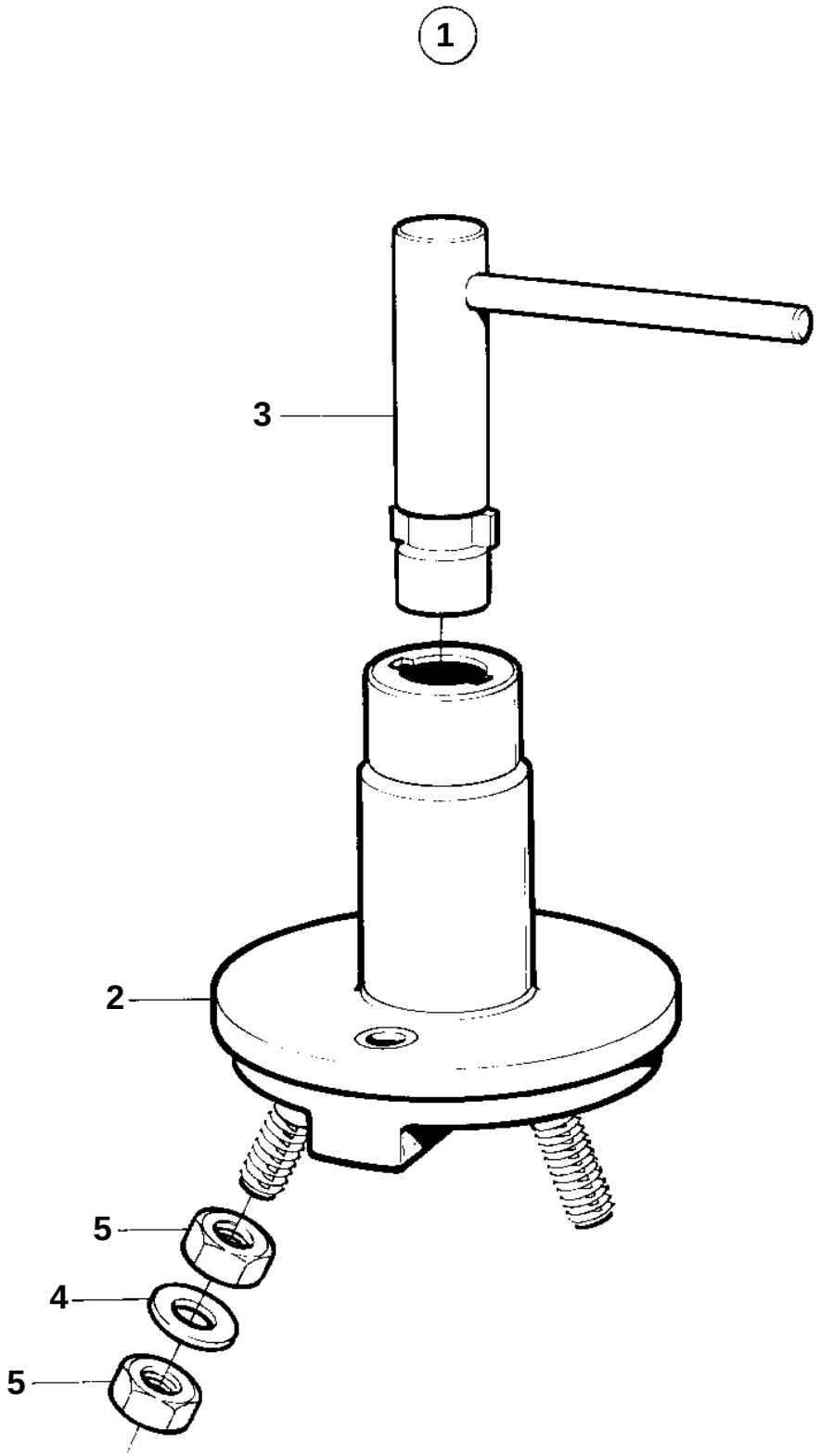

10879

D12D-A MG

REF	PART NO.	QTY	DESCRIPTION		NOTES
1	1140319	1	Battery main switch		150A
	3987034	1	Battery main switch		300A
2		1	· Switch		
3	1140427	1	· Knob		FOR 1140319
	8157766	1	· Key		FOR 3987034
4	1140428	2	· Washer		
5	17602	4	· Nut		