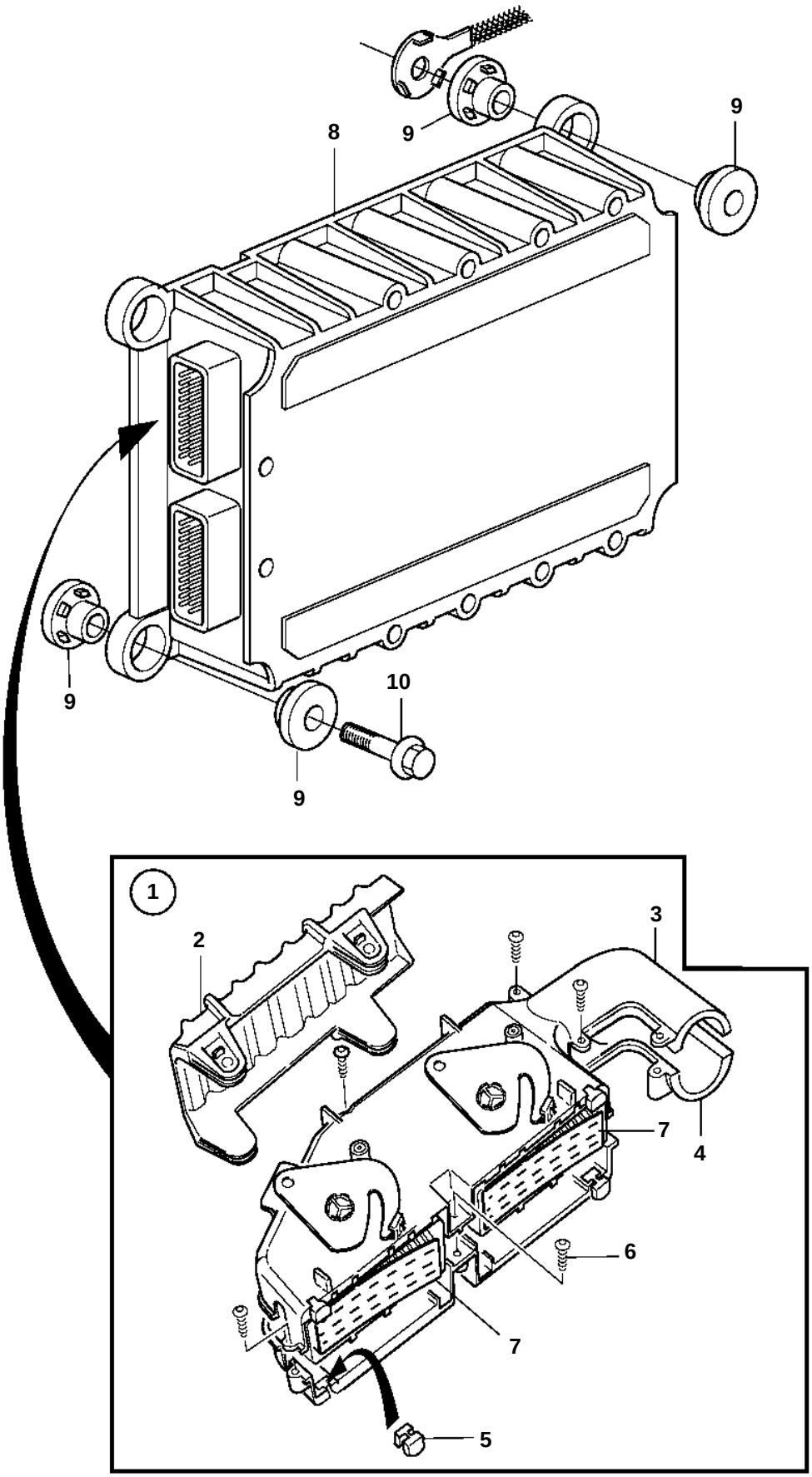

19323

REF	PART NO.	QTY	DESCRIPTION		NOTES
1		1	Switch		
2	3199185	1	· Handle		
3	3173907	1	· Cover		
4	3173908	1	· Cover		
5	3173913	4	· Vibration damper		
6	975367	5	· 6 point socket screw		
7		2	· Tab housing		
8	3838229	1	Control unit	SO	E.U=3803594. 525kW (715hp) 2300 RPM
	3838228	1	Control unit	SO	E.U=3803593. 515kW (700hp) 2300 RPM
	3838230	1	Control unit	SO	E.U=3803595. 496kW (675hp) 2300 RPM
	3838231	1	Control unit	SO	E.U=3803596. 478kW (650hp) 2300 RPM
	3838232	1	Control unit		E.U=3803597. 452kW (615hp) 2100 RPM
9	3095161	4	· Rubber cushion		
10	948217	4	Flange screw		