SP-C1

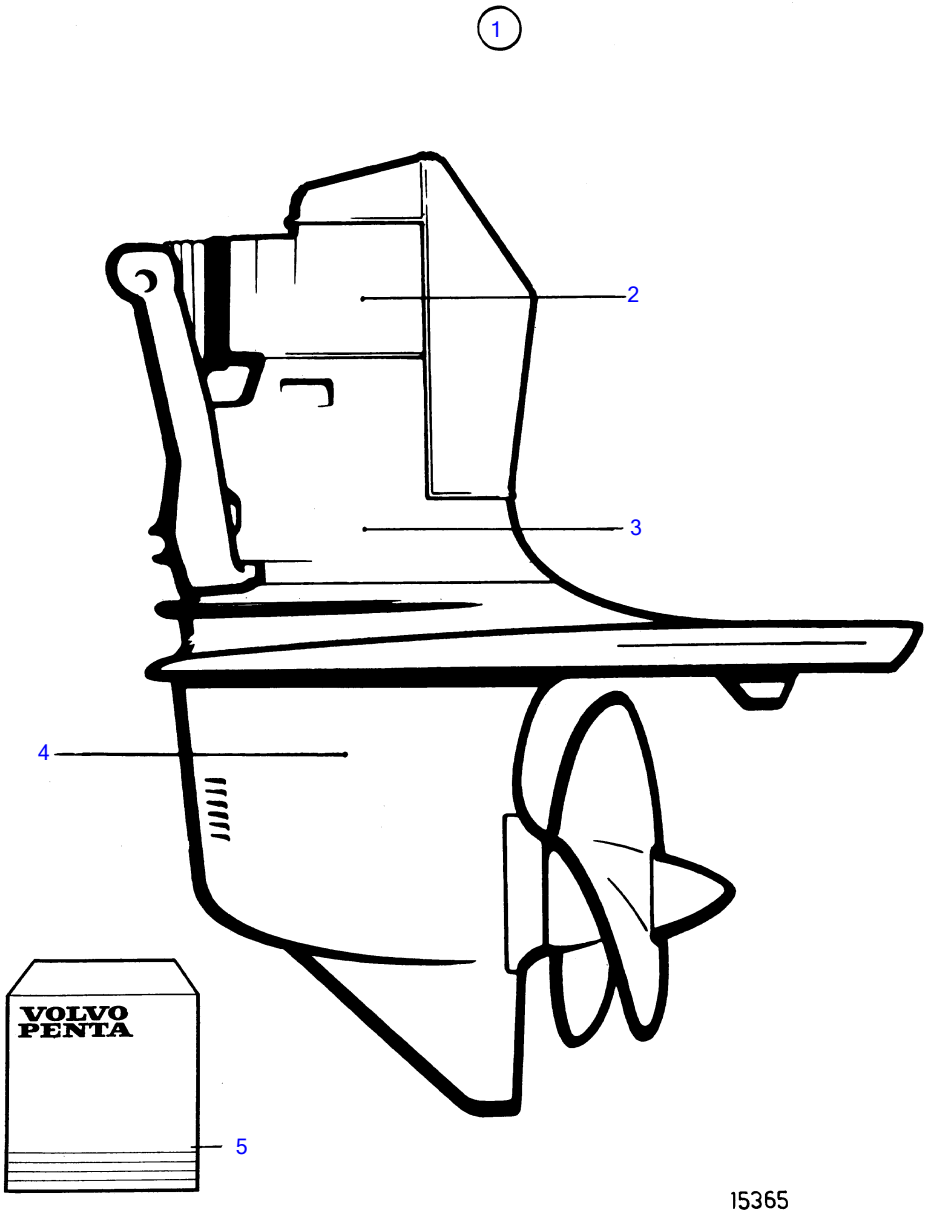

SP-C1

REF	PART NO.	QTY	DESCRIPTION	SEE SEC.	NOTES
1	872856	1	Drive		Ratio 1.61:1
	3803218	1	Aquamatic drive, exc, exch		Ratio 1.61:1
2	873002	1	▪ Gear	1210	
3		1	▪ Intermediate housing	1211	
4	854635	1	▪ Lower gear	1212	
	3803154	1	▪ Lower gear, exch, exch	1212	
5	876266	1	Gasket kit, upper gear		See group 99
	876268	1	Gasket kit, lower gear		See group 99