MERCURY (9.9 (4-STROKE) (323 cc))
Serial Nbr Range: 0P075166 THRU 0P400999 (BEL)

Oil Pump/Camshaft

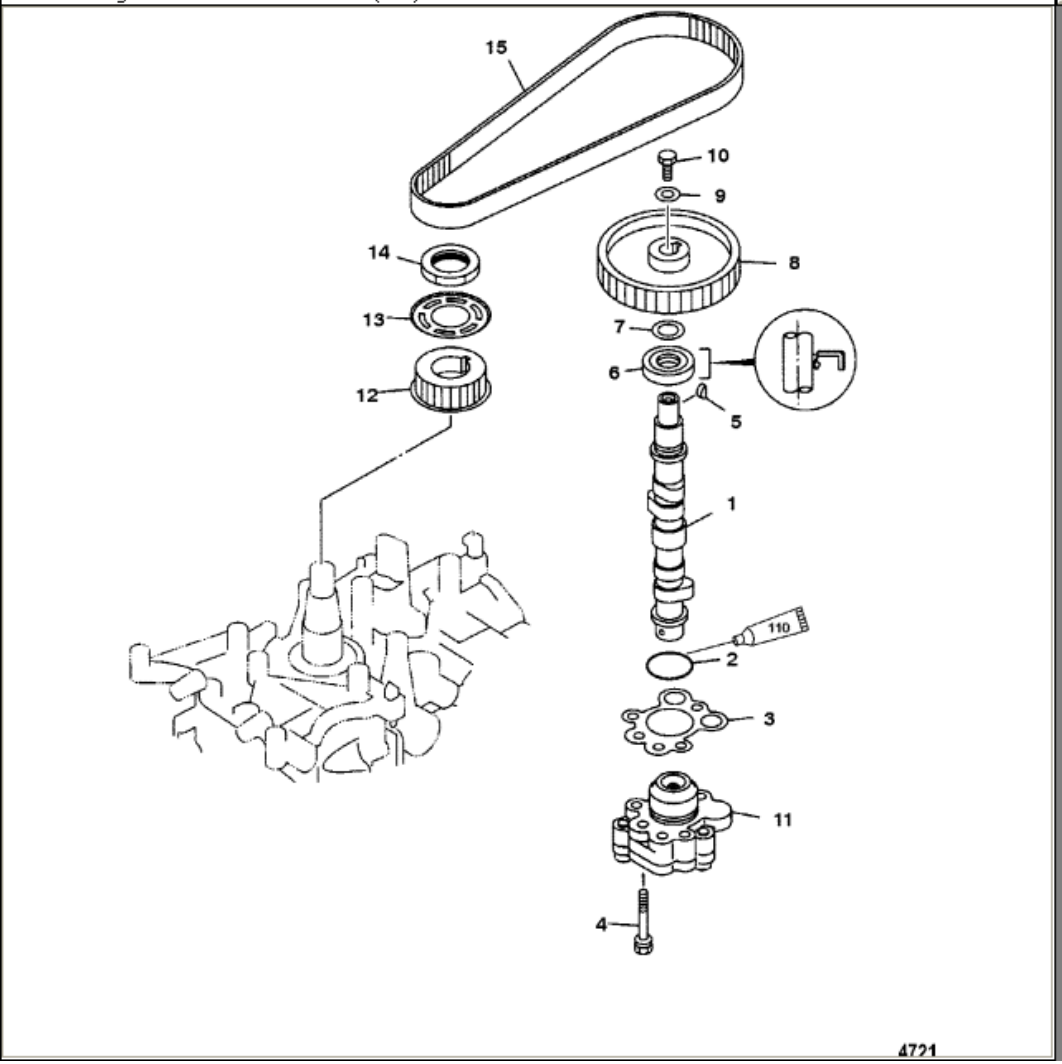

Parts List

Ref	Class	Part	Description	Qty	Comment	Footnote
1		834956	CAMSHAFT	1	(Electric)	5
1		834956	CAMSHAFT	1	(Manual) SN# USA-0T178499/BE	5
1		880136A 1	CAMSHAFT	1	(Manual) SN# USA-0T178500/BE	5
2	25	825462	O-RING	1		5,2
3	27	853523	GASKET	1		5,2
4	10	850879	BOLT, (M6 x 35)	3		5
5	28	84403M	KEY	1		5
6	26	825455	OIL SEAL	1		5,2
7	12	82710M	WASHER	1		5
8	43	834973T	DRIVEN GEAR	1		5
9	12	825498	WASHER	1		5
10	10	896534	BOLT	1		
11		834967T 2	OIL PUMP	1	SN# USA-0T178500/BEL-0P094	5
11		834967A 1	OIL PUMP	1	SN# USA-0T178499/BEL-0P094	5
12	43	834955	DRIVE GEAR	1		5
13	12	850843	WASHER	1		5
14	11	855679	NUT, (M28)	1		5
15		835392	TIMING BELT	1	SN# USA-0T800999/BEL-0P267	
15		835392Q	TIMING BELT	1	SN# USA-0T801000/BEL-0P268	
-		802733A98	POWERHEAD	1	(Electric)	
-		802733A98	POWERHEAD	1	(Manual) SN# USA-0T178499/BE	
-		879783A01	POWERHEAD	1	(Manual) SN# USA-0T178500/BE	
-	27	835427A00	POWERHEAD GASKET SET	1		