MERCURY (225 SEAPRO/MARATHON (3.0L CARB))
Serial Nbr Range: 0G245605 thru 0G760299 (USA)

STEERING ATTACHING KIT

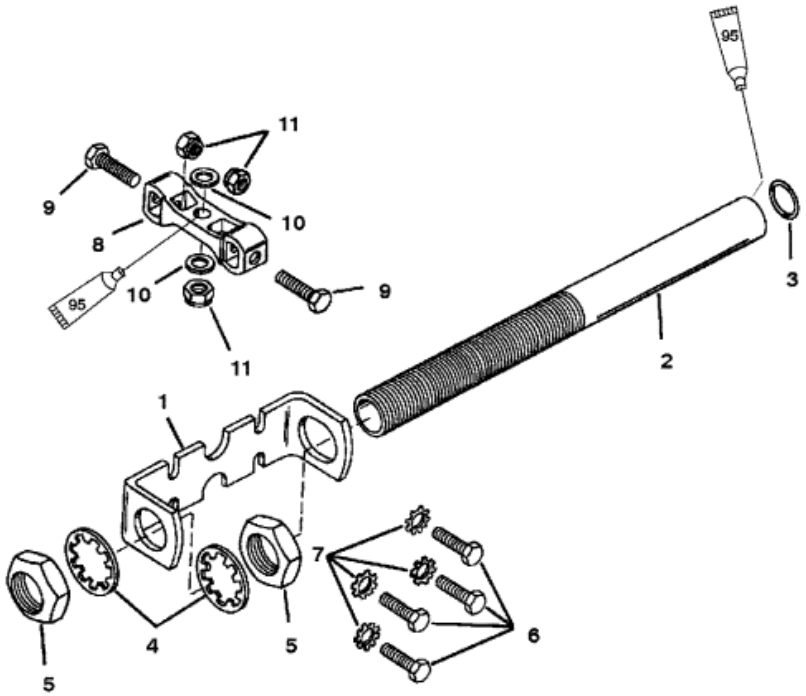

95 2-4-C With Teflon (92-825407A12)

Parts List

Ref	Class	Part	Description	Qty	Comment	Footnote
-		92876A 8	STEERING ATTACHING KIT (SIN(	1		
1		41055A 1	MOUNT	1		
2		71565A 2	TUBE	1		
3	25	48462	O RING	1		
4	13	821203	LOCKWASHER	2		
5	11	37984	JAM NUT	2		
6	10	38601	SCREW	4		
7	13	78968	STAR WASHER	4		
8		88319	COUPLER	1		
9	10	73732	SCREW	2		
10	12	34931	WASHER	2		
11	11	34863	NUT	3		