MERCURY (20XD (2 CYL.))
Serial Nbr Range: 9415101 THRU 9507380 (BEL)

FUEL FILTER ASSEMBLY

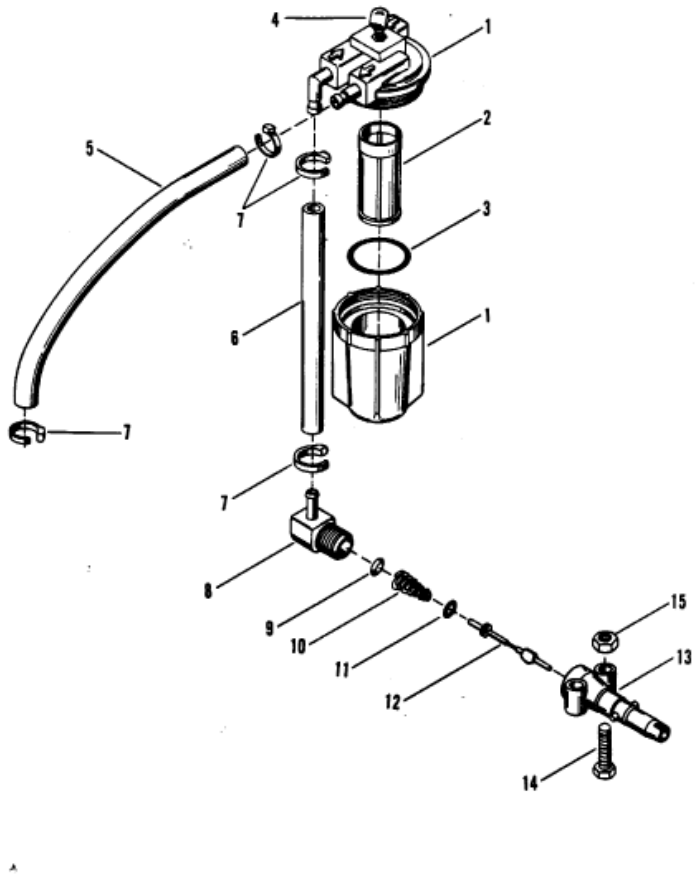

Parts List

Ref	Class	Part	Description	Qty	Comment	Footnote
1	35	87946A13	FUEL FILTER ASSEMBLY	1		
2	35	87946A 3	FILTER ASSEMBLY	1		
3	25	98277	SEAL, FUEL FILTER	1		
4		91935	BALL FUEL FITLER	1		
5	32	99127109	FUEL LINE, FILTER TO CARBURE	1		
6	32	99127109	FUEL LINE, FILTER TO ADAPTOF	1		
7	54	68424	CLAMP, FUEL LINE	4		
8	22	98750	FITTING, FUEL LINE	1		
9		30188	CUP WSHER, ADAPTOR	1		
10	24	23067	SPRING, ADAPTOR STEM	1		
11	25	20415	"O" RING, ADAPTOR STEM	1		2
12		23069	STEM, ADAPTOR	1		
13		22833	ADAPTOR, CHECK UNIT	1		
14	10	40003 32	SCREW, ADAPTOR TO BOTTOM	1		
15		40063 4	NUT, ADAPTOR SCREW	1		
-	27	41499A87	GASKET SET			