MERCURY (20 (2 CYL.))
Serial Nbr Range: 9507381 THRU 9807908 (BEL)

Recoil Starter Assembly(MANUAL)

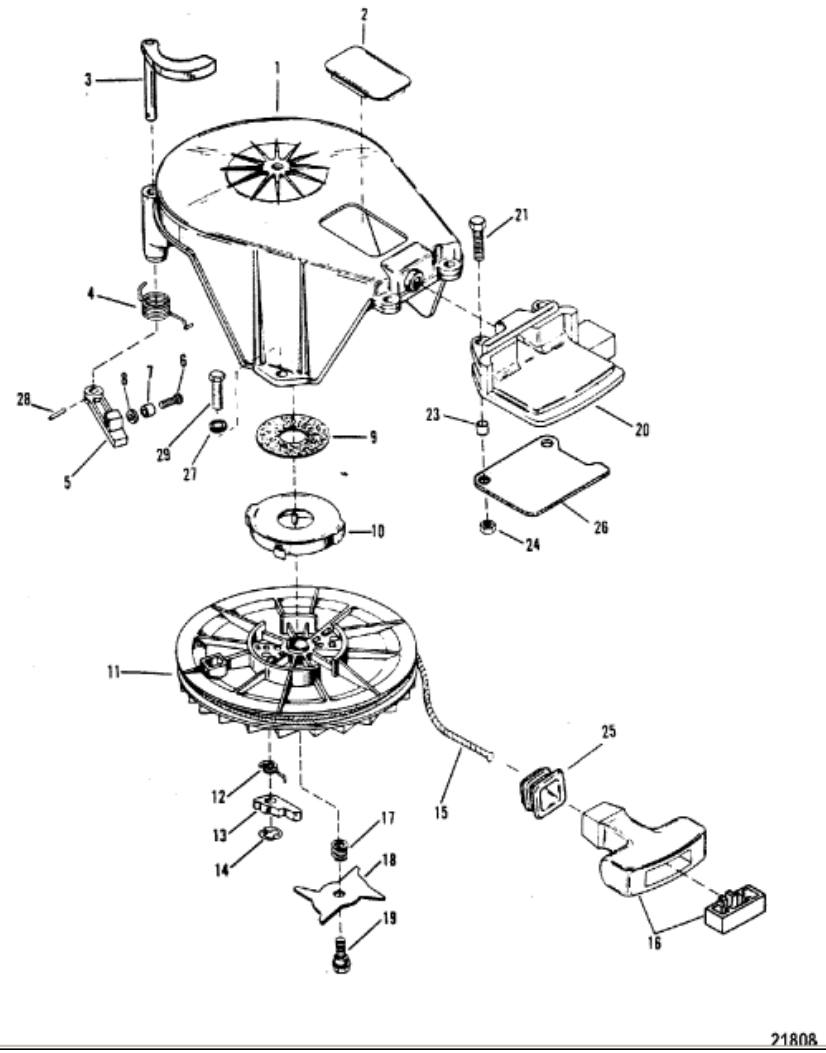

Parts List

Ref	Class	Part	Description	Qty	Comment	Footnote
1		42712A 1	HOUSING, STARTER	1		
2		86971	COVER, STARTER HOUSING (EA	1		
3		94019	LEVER, LOCK (UPPER)	1		
4	24	12734	SPRING, UPPER LOCK LEVER	1		
5		93876 2	LEVER, LOCK (LOWER)	1		
6	10	92799	SCREW, (#10-16 x 1.12), LOWER	1	(20/25)	
6	10	92051	SCREW, (10-16 x .75)	1	(SeaPro/Marathon 25/Super 15)	
7	23	818142	BUSHING	1	(SeaPro/Marathon 25/Super 15)	
8	12	89302	WASHER, (.203 x .406 x .040)	1	(SeaPro/Marathon 25/Super 15)	
9		90478	PAD, FELT	1		
10	24	86857	SPRING, STARTER	1		
11	50	42566	SHEAVE, STARTER	1		
12	24	86851	SPRING, CAM	2		
13		86850	CAM	2		
14	53	86849	RETAINING RING, CAM	2		
15	50	12066A 9	ROPE, STARTER	1		
16		85174A 1	HANDLE ASSEMBLY, STARTER F	1		
17	24	86852	SPRING, CAM	1		
18		86853	CAM	1		
19	10	97516	SCREW, CAM TO STARTER SHE.	1		
20		42626 4	SUPPERT, STARTER HANDLE	1		
21	10	40019111	SCREW, (M5 x 35), SUPPORT TO	2		
23	23	30977 2	SPACER, SUPPORT SCREW	4		
24	11	40063 3	NUT, (M5), SUPPORT SCREW	2		
25		44180	BUSHING, Rope	1		
26		17212	SUPPORT	1		
27	12	23538	WASHER	1		
28	17	38489	PIN, Roll, LOCK LEVER	1		
29	10	40011128	SCREW, (M6 x 20), STARTER HO	2		
29	10	40011131	SCREW, (M6 x 35), STARTER HO	1		