MERCURY (1400, 140)
Serial Nbr Range: 7112773 THRU 7132512 (CAN)

POWER TRIM CYLINDER REPAIR KITS

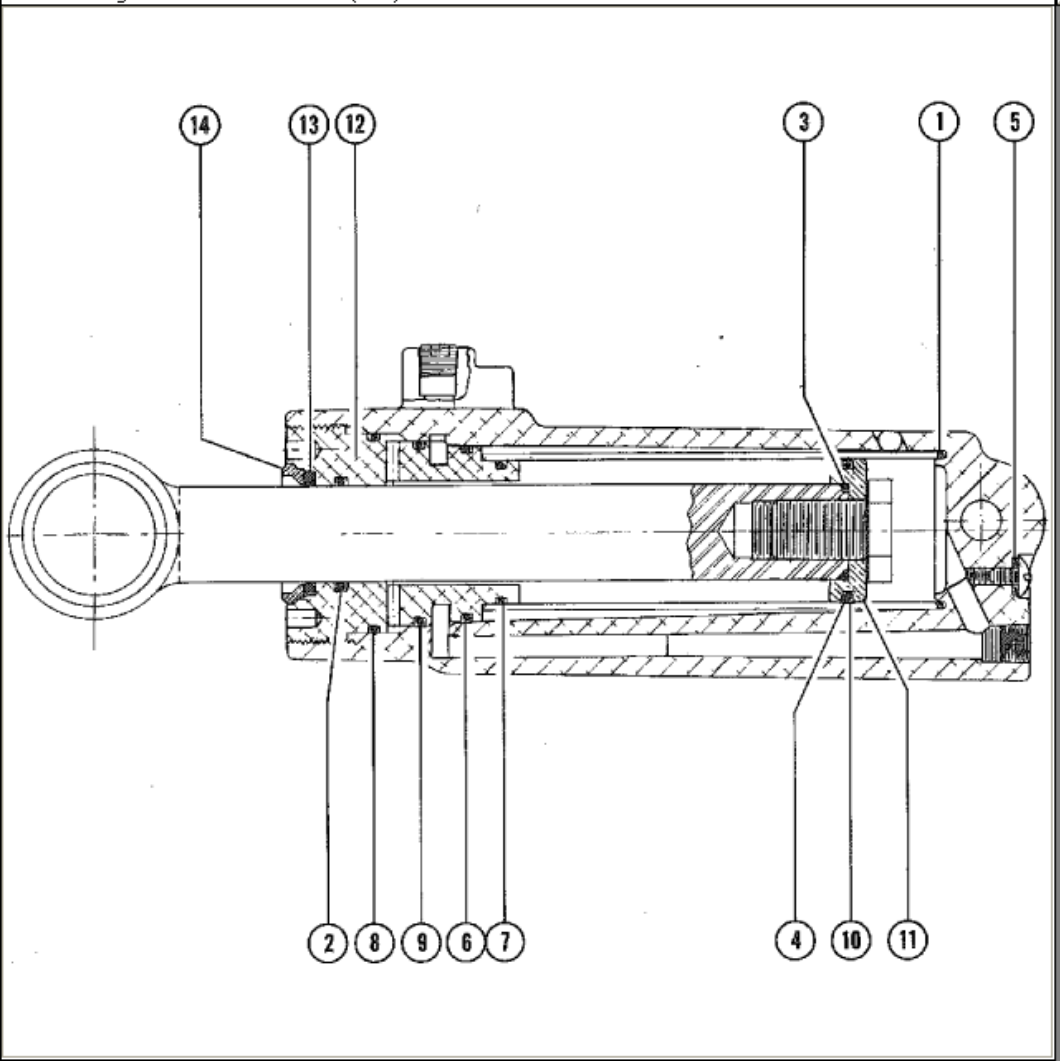

Parts List

Ref	Class	Part	Description	Qty	Comment	Footnote
		64507A 1	REPAIR KIT	1		
1		N.S.S.	"O" RING (1 1/2" X 1 5/8" X 1/1	1		1
2		N.S.S.	"O" RING (3/4" X 15/16" X 1/8"	1		1
3		N.S.S.	"O" RING (5/8" X 3/4" X 1/16")	1		1
4		N.S.S.	"O" RING (1 1/4" X 1 7/16" X 1/	1		1
5		N.S.S.	"O" RING (7/32" X 11/32" X 1/1	2		1
6		N.S.S.	"O" RING (1 5/8" X 1 13/16" X 1	1		1
7		N.S.S.	"O" RING (1 5/16" X 1 1/2" X 1/	1		1
8		N.S.S.	"O" RING (1 7/8" X 2" X 1/8")	1		1
9		N.S.S.	"O" RING (1 3/4" X 1 15/16" X 1	1		1
10		N.S.S.	SEAL, SLIPPER - PISTON	1		1
11		N.S.S.	PISTON, ROD - HEAVY DUTY	1		1
12		64505A 1	RETAINER ASSEMBLY, PISTON	1		
13		N.S.S.	ROD, SCRAPER	1		1
14		N.S.S.	RETAINER, SCRAPER	1		1