264

VOLVO PENTA.

AS Volvo Penta
SE-405 08 Göteborq, Sweden

Parts Bulletin

Group	Number	Version
P-48-2	**1**	**01**

Power Take Off, 03 Engines

Models: 03 Accessories

Distribution: Parts Date: 12-2005 Binder: Parts Replaces:

Universal bracket and pulley kit for power take of is now on stock in Gent for the 03 engine family. Part numbers: **Universal bracket kit: 3809865** (fig. 1)
Pulley kit: 3809866 (fig. 2)

Note: There is no alternator included in either kit!
Volvo Penta recommends Mastervolt
Alternator is to be chosen and purchased by the customer.

fig. 1

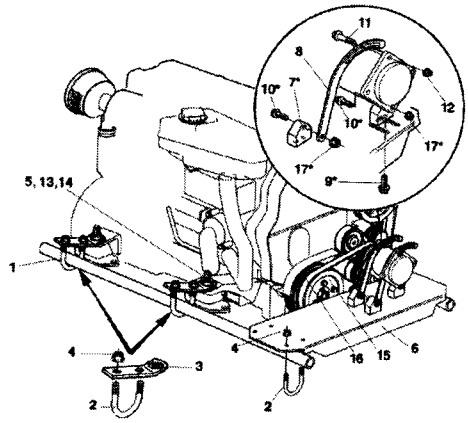

Added length of engine:	min. 150 mm
Total tube(1) length:	900mm
Added width of engine:	min. 160 mm
Total bracket(6) width:	760mm

fig. 2

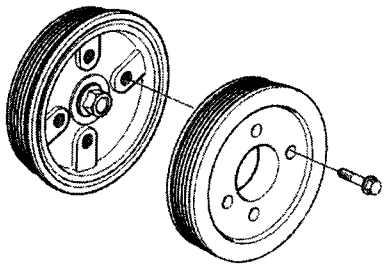

The diagrams below (fig. 3) show torque limits depending on the direction of belt tension from the driven unitz-s.

fig. 3

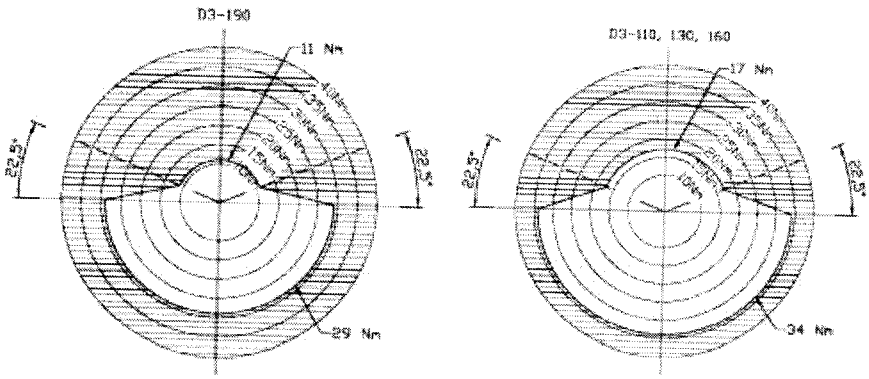

PTO with stub shaft

To increase the out take of power from the front end of the 03 engine, beyond the limits set for the belt and pulley system, a stub shaft can be used where the torque is taken out without additional radial loads on the engine. The torque limit for 03 with stub shaft is: 400 Nm.

How to read the power diagram (fig. 3)

Torque diagram below is for a 06-350 and can NOT be applied for engines with different configartions. Shown example is only a theoretical case.

The calculation is based on a configuration as described in the top left picture below (fig. 4).

Angles are for A = 20° and for B = 135°.

Lets say the torque for A = 36 Nm (26,6 Ibf ft) and B = 27 Nm (20 Ibf ft) then the composant vector will result in a torque at 34,5 Nm (25,5 Ibf ft) with a direction of force at 65,5°.

As shown in the picture below right (fig. 5), the composant vector is within the permissible torque area.

fig. 4

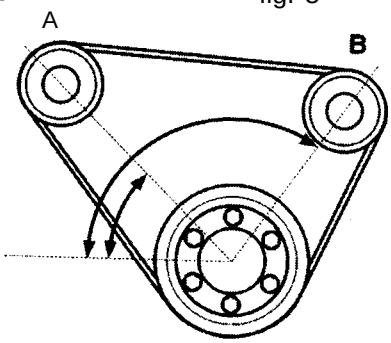

fig. 5