196

"VOL"VOPENTA. .

AB Volvo Penta
SE-405 08 Goteborg, Sweden

Parts Bulletin

Group	Number	Version
P-32-1	3	01

Extra Alternator Kit, 02-55/75 Engines

Models: 02

Distribution: Parts Date: 11-2006 Binder: Parts Replaces:

To meet the requirements from the market to have 24V systems on 02-55/75 installations a kit has been developed.
This kit consists of all required components to replace the standard alternator with a compact Mastervolt 24V/110A alternator or a standard 24V/80A(1), while moving the standard alterantor"' into a new position to supply the engine with the necessary power.

Part No(3): 3885212
Installation instruction: 7746145

To be able to connect the 12V standard alternator in its new position an extra cable harness is required.

Part No(4): 3886482
Installation instruction: 7746144

The kits are available now through parts sales.

IMPORTANT NOTE: No alternator included in these kits.

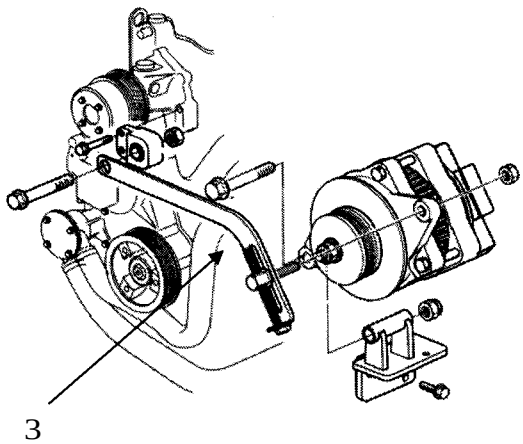

Fig. 1

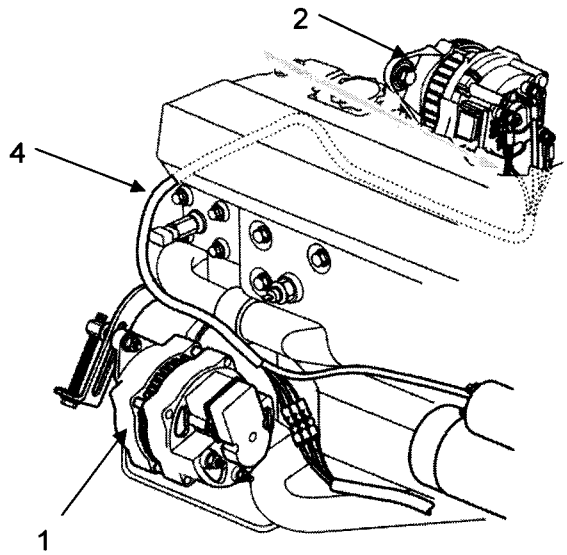

Fig. 2