167

V"OLV"OPENT.A

Volvo Penta of the Americas
1300 Volvo Penta Drive
Chesapeake, Virginia 23320-9810

Parts Bulletin

Group	Number	Version
P-26-1	5	01

Freshwater Cooling Kit

Models: see lists

Distribution: Parts Date: July, 2009 Binder: Parts Replaces: N/A

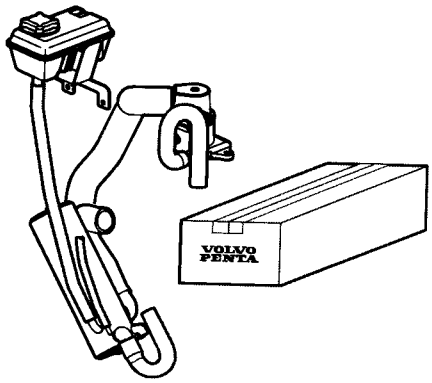

Freshwater Cooling kit released for the following gas engines;

Kit **21403116:**

3869352	5.0GXiC-J
21182210	5.0GXiCE-M
3869459	5.7GiC-300-J
21182213	5.7GiCE-300-M
3869353	5.7 GXiC-J
21189867	5.7GXiCE-M

The kit can be ordered through the normal Parts order routine.

Service parts for these kits

For future service of engines that were upgraded with this kit, use the Cooling section pages for the corresponding freshwater cooled specifications. These engines have an "F" at the end of the suffix.

example: for 5.7GXiC-J with kit 21403117, use the catalog Cooling section pages for 5.7GXiC-JF.

Factory installed freshwater cooling

Beginning July 2009 there will be a change to the way engines are ordered, manufactured and labeled. The engines listed above can be built with factory installed freshwater cooling as an option. In this case the engines will not have the -xF suffix. Use the same method to obtain service parts for the cooling section of these engines.