Connecting kit for Volvo Penta IPS-A, Jackshaft

Volvo Penta IPS-A

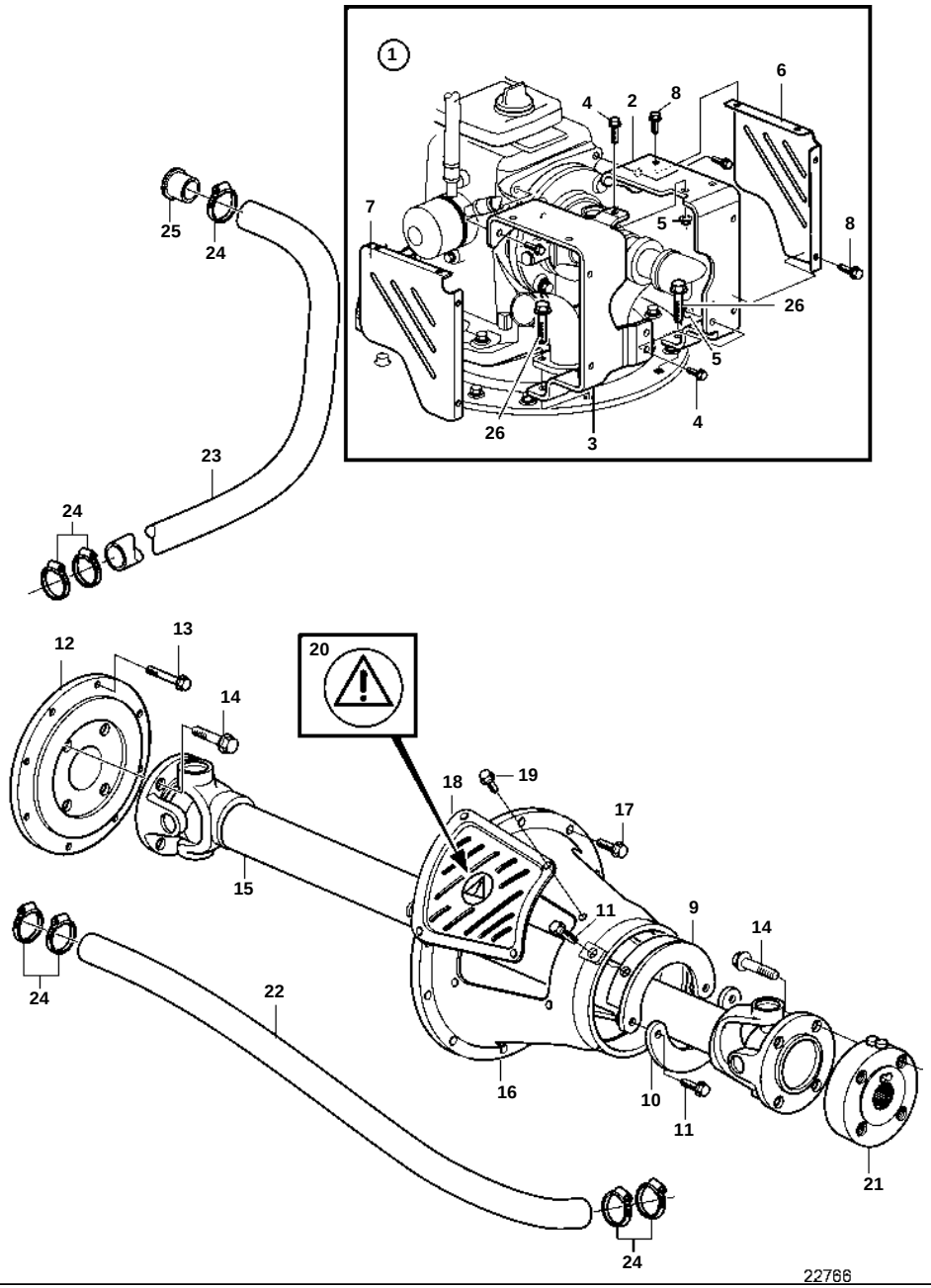

Volvo Penta IPS-A

REF	PART NO.	QTY	DESCRIPTION		SEE SEC.	NOTES
1		1	Jack shaft			
2	3812812	1	· Bracket			
3	3812835	1	· Bracket			
4	946472	5	· Screw			
5	971095	3	· Nut			
6	3812862	1	· Cover			
7	3812863	1	· Cover			
8	946173	8	· Flange screw			
9	3817570	1	· Catch			
10	3817572	1	· Plate			
11	946470	4	· Flange screw			
12	3818451	1	Clutch			
13	965186	8	Flange screw			
14	465826	8	Screw			
15	3818295	1	Axle shaft			L=570-650MM
	3818293	1	Axle shaft			L=670-750MM
	3818292	1	Axle shaft			L=770-850MM
	3818291	1	Axle shaft			L=870-950MM
	3818290	1	Axle shaft			L=970-1050MM
	3818289	1	Axle shaft			L=1070-1150MM
	3818288	1	Axle shaft			L=1170-1250MM
	3817454	1	Axle shaft			L=1270-1350MM
	3817453	1	Axle shaft			L=1370-1450MM
	3817452	1	Axle shaft			L=1470-1550MM
	3817451	1	Axle shaft			L=1570-1650MM
	3817450	1	Axle shaft			L=1670-1750MM
16	3861047	1	Protecting casing			
17	946752	14	Flange screw			
18	3862871	2	Protecting cover			
19	968476	8	Flange screw			
20	3817024	2	Decal			
21	3862153	1	Flange			
22	3819573	1	Hose			
23	3819572	1	Hose			
24	961672	7	Clamp			
25	3819914	1	Sleeve			
26		2	Screw		7363	