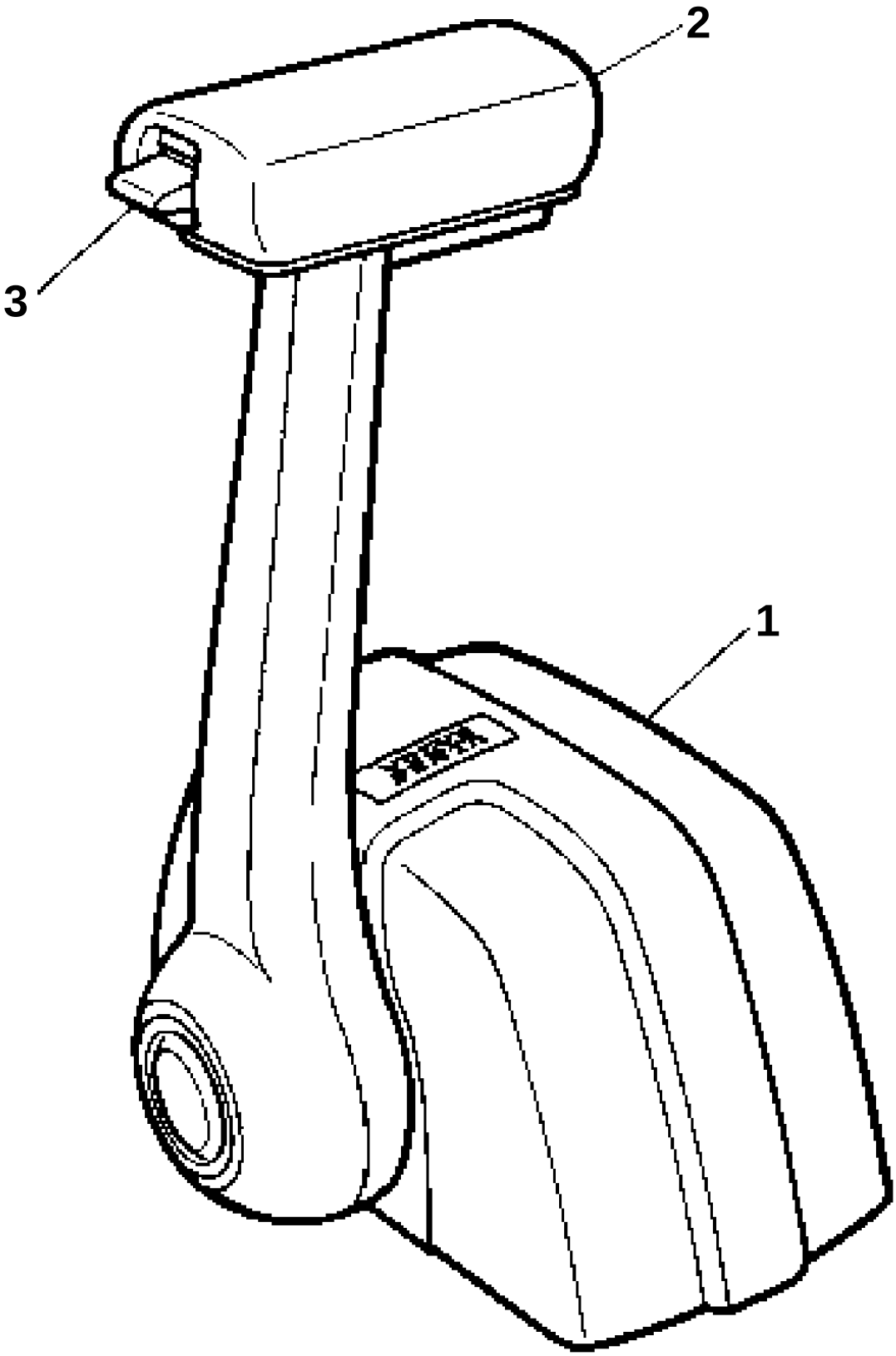

GR71020

REMOTE CONTROL ASSEMBLY 5

REF	PART NO.	QTY	DESCRIPTION	NOTES
	3856902	1	Control, Top mount single lever with trim/tilt	
	3856782	1	Control, Top mount single lever without trim/tilt	
1	3856837	1	· Cover	
2	3856839	1	· Switch	
3	3856841	1	· Switch	
	3856840	1	· Switch	Not shown
	3857721	1	· Small parts kit, Cable attachment	Not shown
	3856838	1	· Kit, Mounting parts	Not shown