SX-M, SX-MACLT, SX-MBAC, SX-MHP

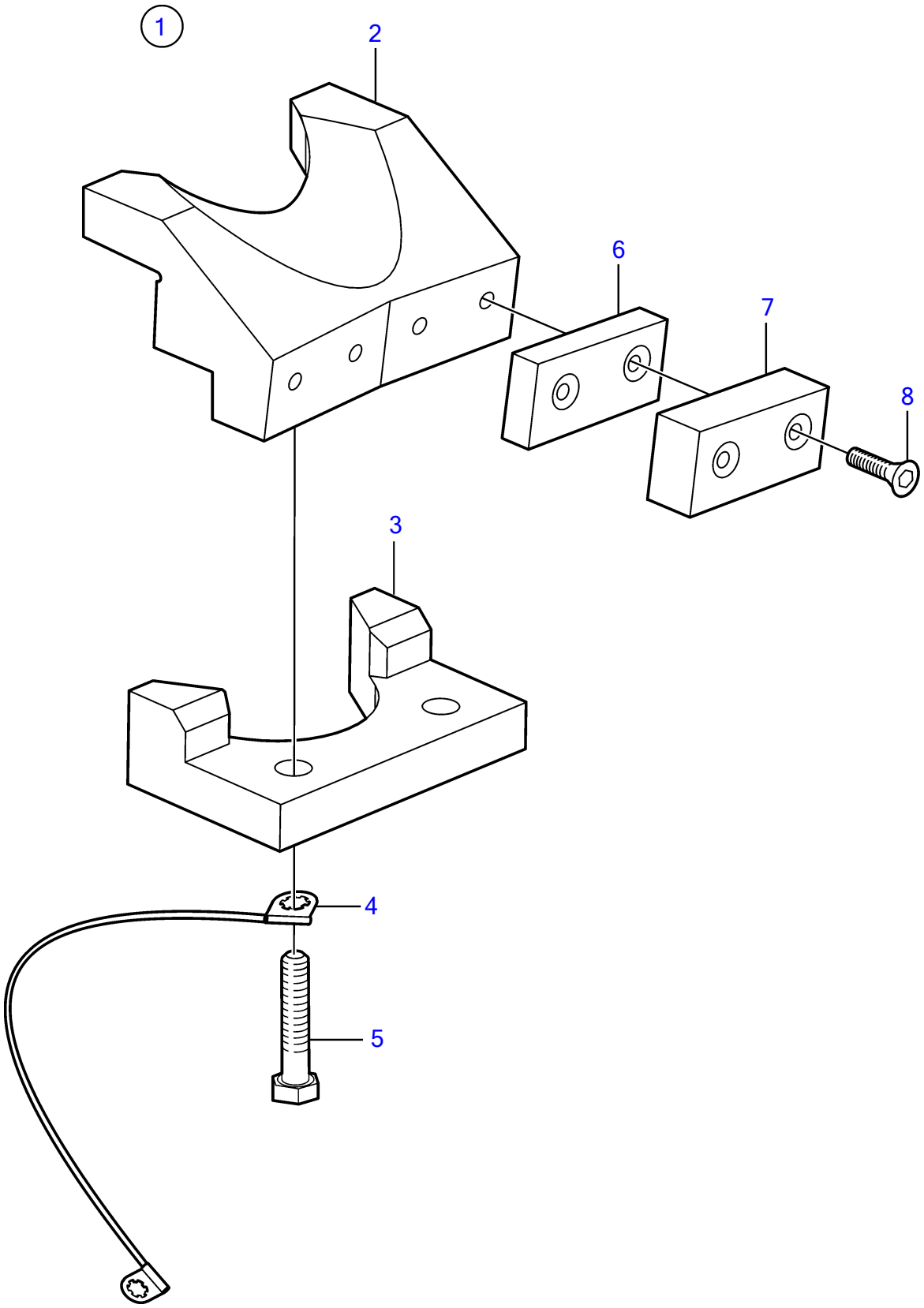

19616

SX-M, SX-MACLT, SX-MBAC, SX-MHP

REF	PART NO.	QTY	DESCRIPTION	NOTES
1	3857598	1	Set	Trim limit
2	(3857973)	1	· Spacer	Obsolete part
3	(3857908)	1	· Clamp	Obsolete part
4	3853849	1	· Chassis ground cable	
5	963581	2	· Screw	
6	(3857909)	1	· Spacer	Obsolete part
7	(3857919)	1	· Spacer	Obsolete part
8	981609	4	· Hex. socket screw	