Mounting Kit, Clamp Ring. SN-3950001772

IPS3-A

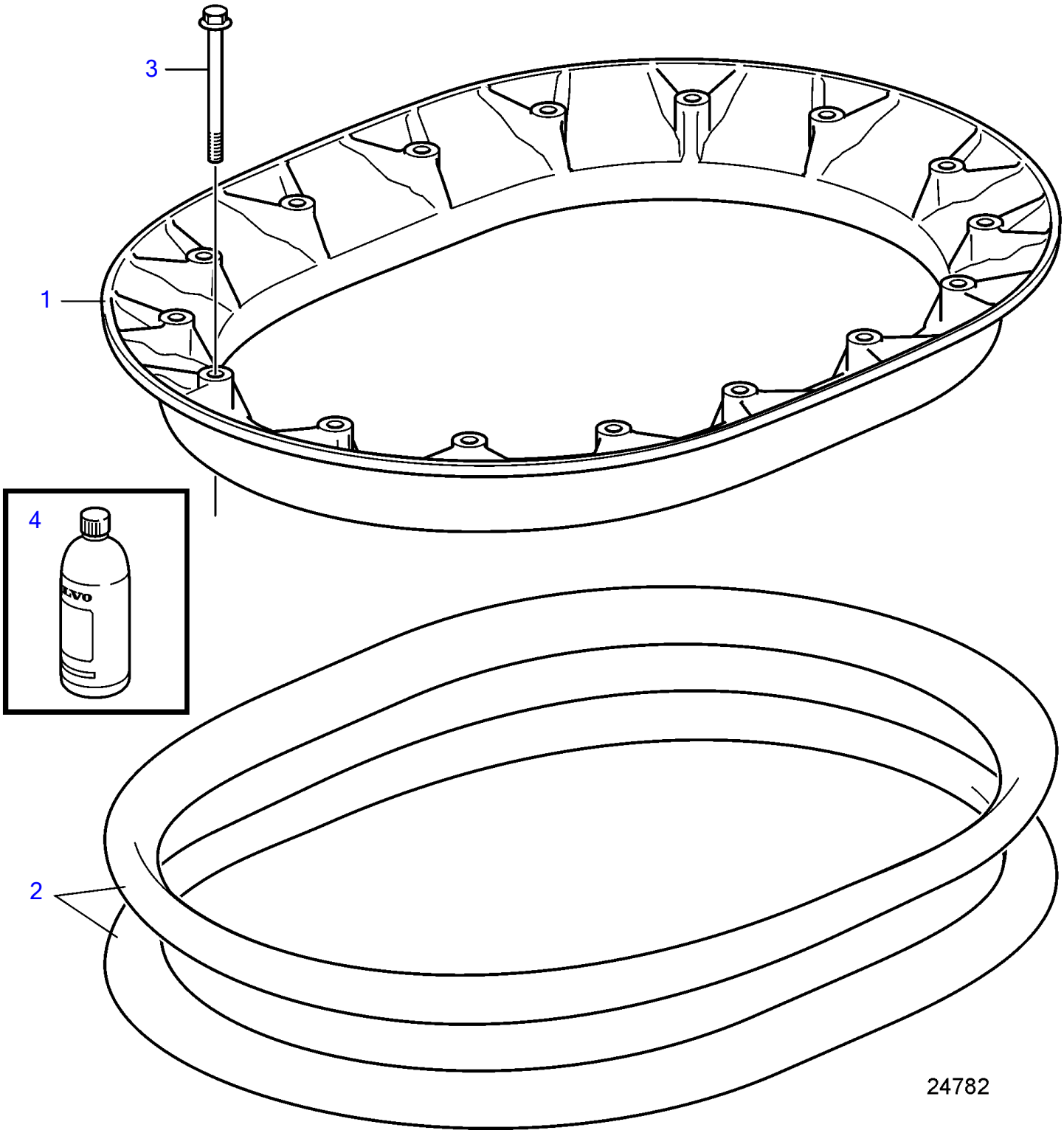

Mounting Kit, Clamp Ring. SN-3950001772

IPS3-A

REF	PART NO.	QTY	DESCRIPTION	NOTES
1	3594504	1	Tensioning ring	
2	3843996	2	Rubber ring	
3	992143	16	Flange screw	
4	3817243	1	Lubricant	Use as lubrication for rubber rings