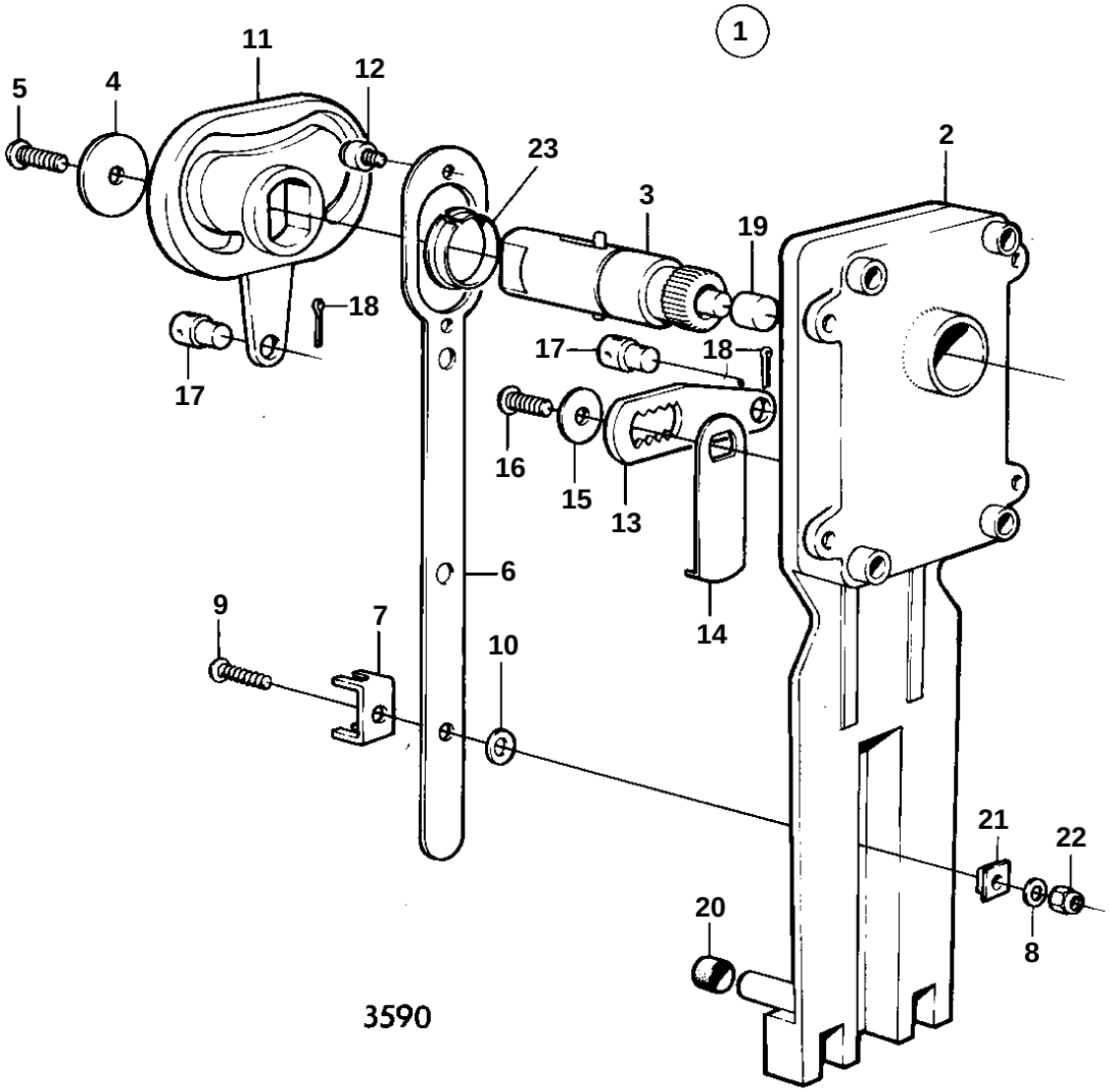
1
11
12
5
4
23
2
3
19
18
17
18
17
16
15
13
6
9
7
10
14
21
22
20
8
3590

REF	PART NO.	QTY	DESCRIPTION	NOTES
1	851600	1	Control	For top mounting, LATE TYPE