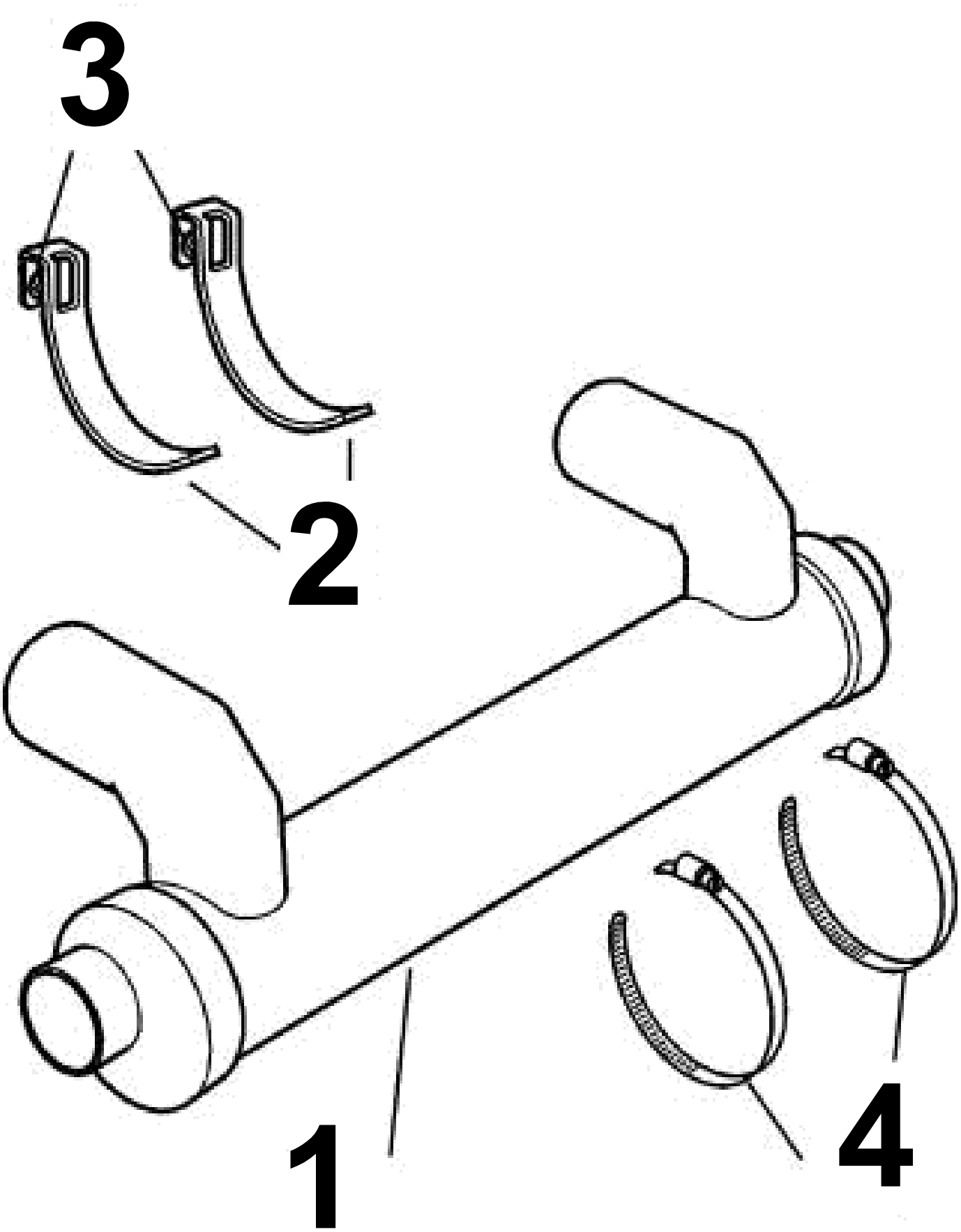
3
2
1
4

MUFFLER KIT (PJX ONLY)

REF	PART NO.	QTY	DESCRIPTION
	3856714	1	Muffler
1	3856909	1	Muffler
2	3856712	2	Bracket
3	946471	2	Screw
4	961678	2	Hose clamp