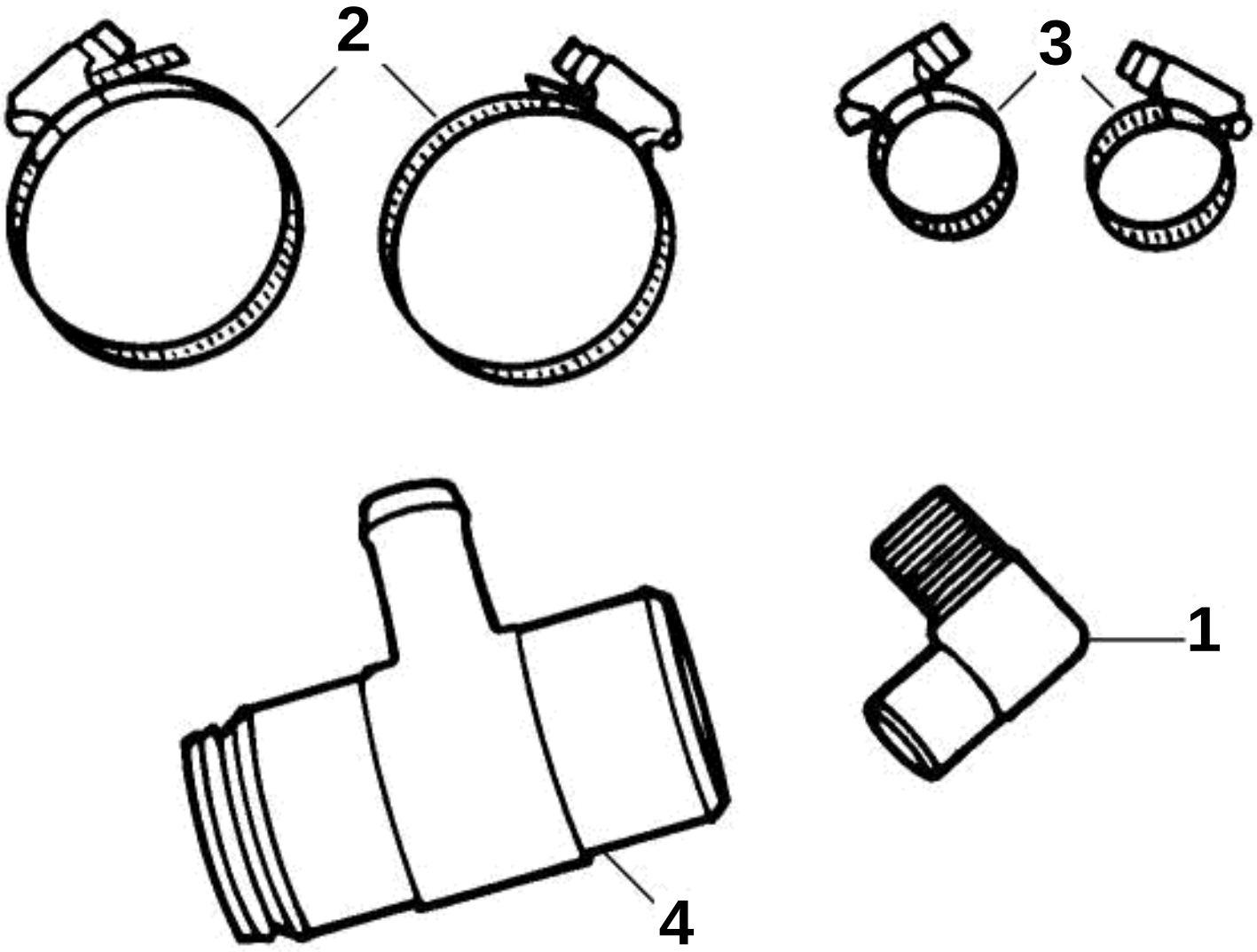
2
3
1
4

HOT WATER OUTLET KIT 2

REF	PART NO.	QTY	DESCRIPTION
	3856266	1	Hot water outlet, 7.4, 8.2 Liter
1	856483	1	· Hose nipple
2	3852098	2	· Clamp
3	3853813	2	· Clamp
4	3852730	1	· T-pipe