BB260B,BB260C

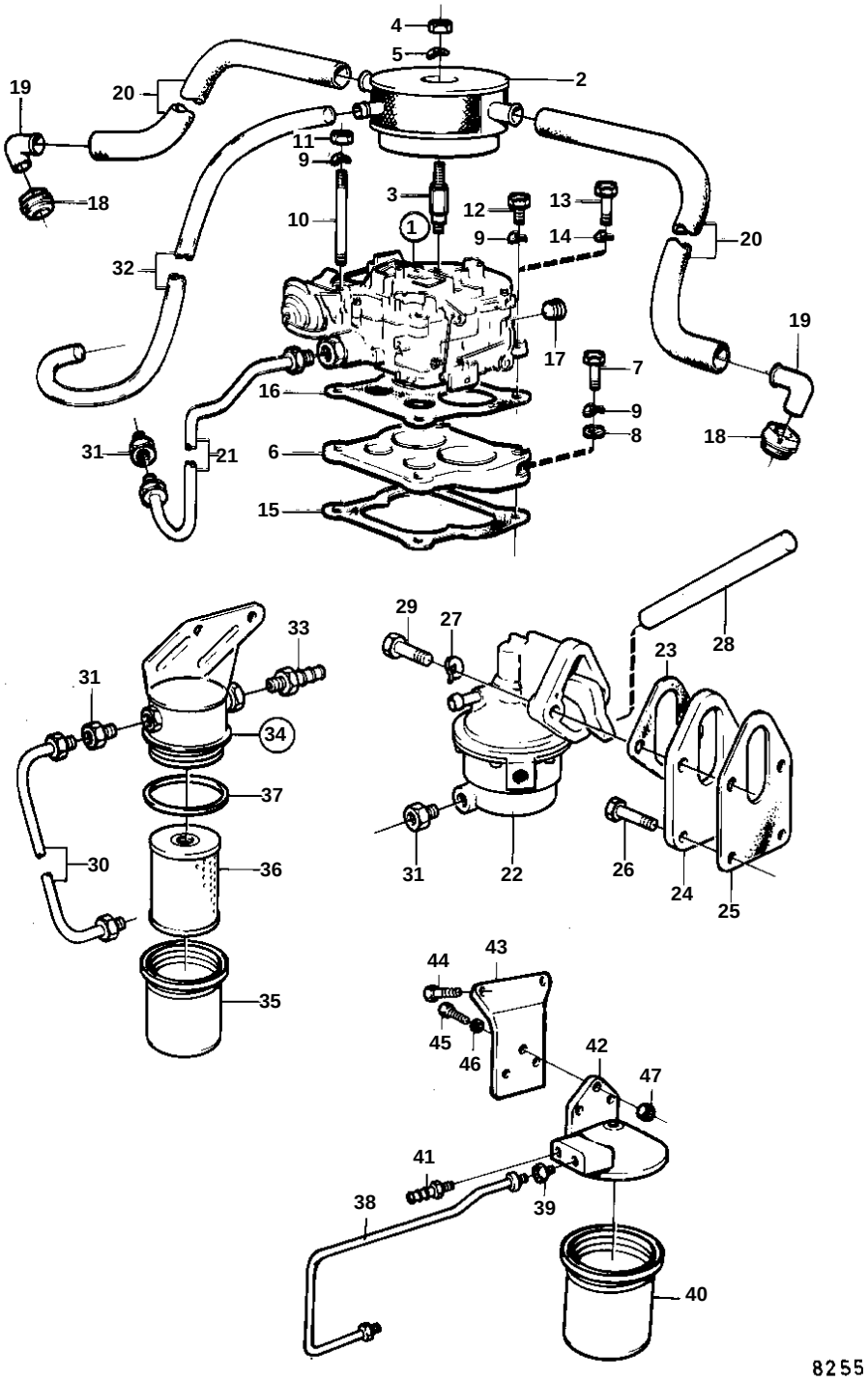

BB260B,BB260C

REF	PART NO.	QTY	DESCRIPTION		SEE SEC.	NOTES
1	841047	1	Carburetor			
					02C-0250	
2	841597	1	Flame trap			(834720)
3	834795	1	Stud			
4	950352	1	Lock nut			
5	941906	1	Spring washer			
13	940159	2	Screw			L = 32 MM
	955532	2	Screw			L = 95 MM
14	941907	4	Spring washer			
16	826479	1	Gasket	IK		SEE GROUP 2B
17	952075	1	Plug			
18	835415	2	Sleeve			
19	841546	2	Hose attachment			
20	941995	X	Rubber hose			L = 2X300 MM
21	841356	1	Tube			
22	826493	1	Fuel pump, FUEL PUMP COMPONENTS			
		X				
23	818668	1	Gasket	IK		
24	835333	1	Flange			
25	835087	1	Gasket	IK		
26	841426	2	Screw			
27	942336	2	Spring washer			
28	835422	1	Push rod			
29	940162	2	Screw			
30	841358	1	Tube			
31	180303	3	Nipple			
32	941149	X	Plastic hose			L = 700 MM
33	834781	1	Nipple			
34	834717	1	Fuel filter			
35	826409	1	· Cover			
36	841162	1	· Filter			
37	841030	1	· · Gasket			