INLET MANIFOLD: BB260A

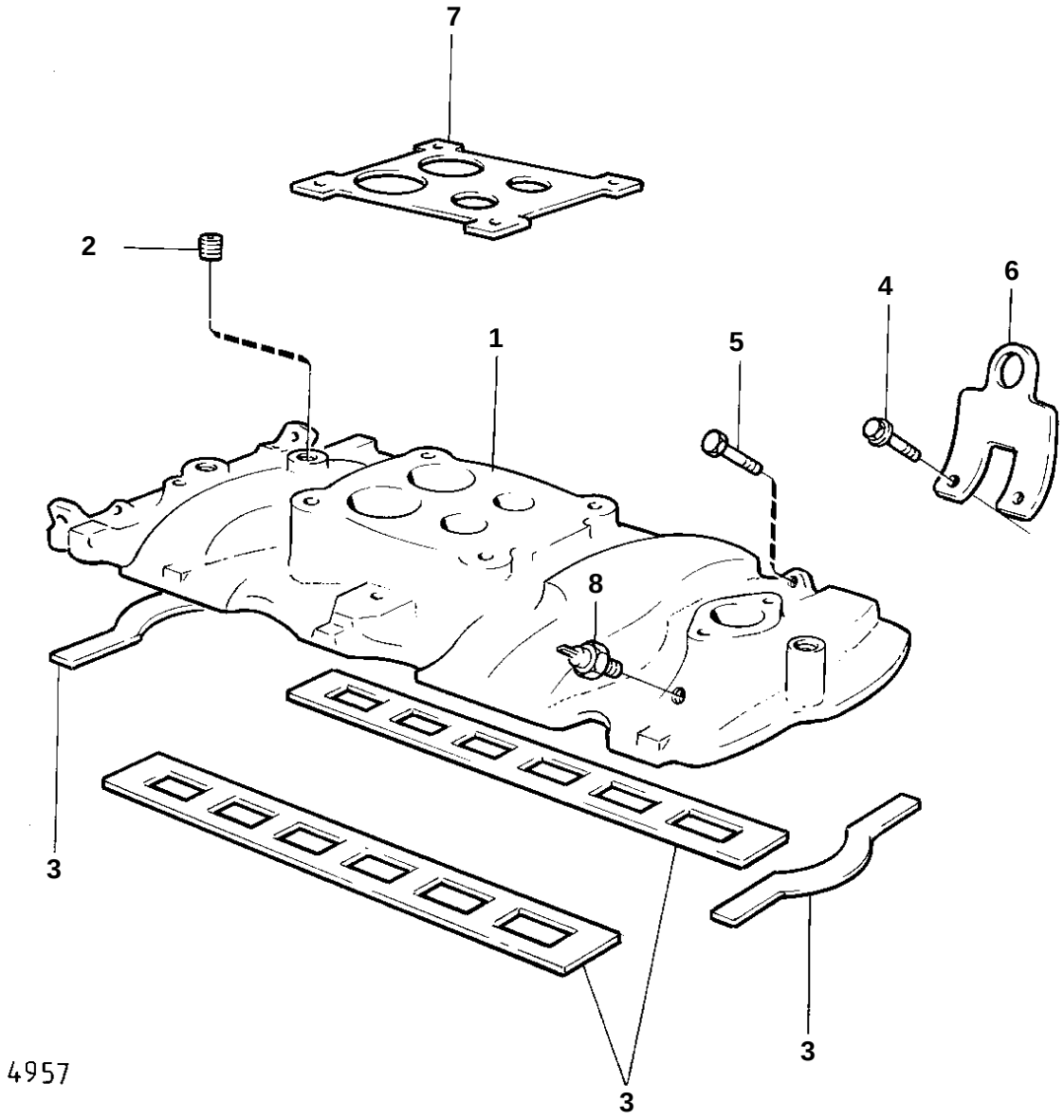

REF	PART NO.	QTY	DESCRIPTION		NOTES
1	835567	1	Inlet pipe		
2	968145	1	Plug		(952076)
3	841032	1	Gasket kit	IK	MO-15153
	841720	1	Gasket	IK	MO15154-
4	945767	3	Screw		
5	955535	9	Screw		
6		2	LIFT EYE		
7	826479	1	Gasket	IK	SEE GROUP 2C
8	835630	1	Temperature sensor		SEE GROUP 3
	841261	X	Sealant	IK	SEE GROUP 9