CONTROL MECHANISM: 851601

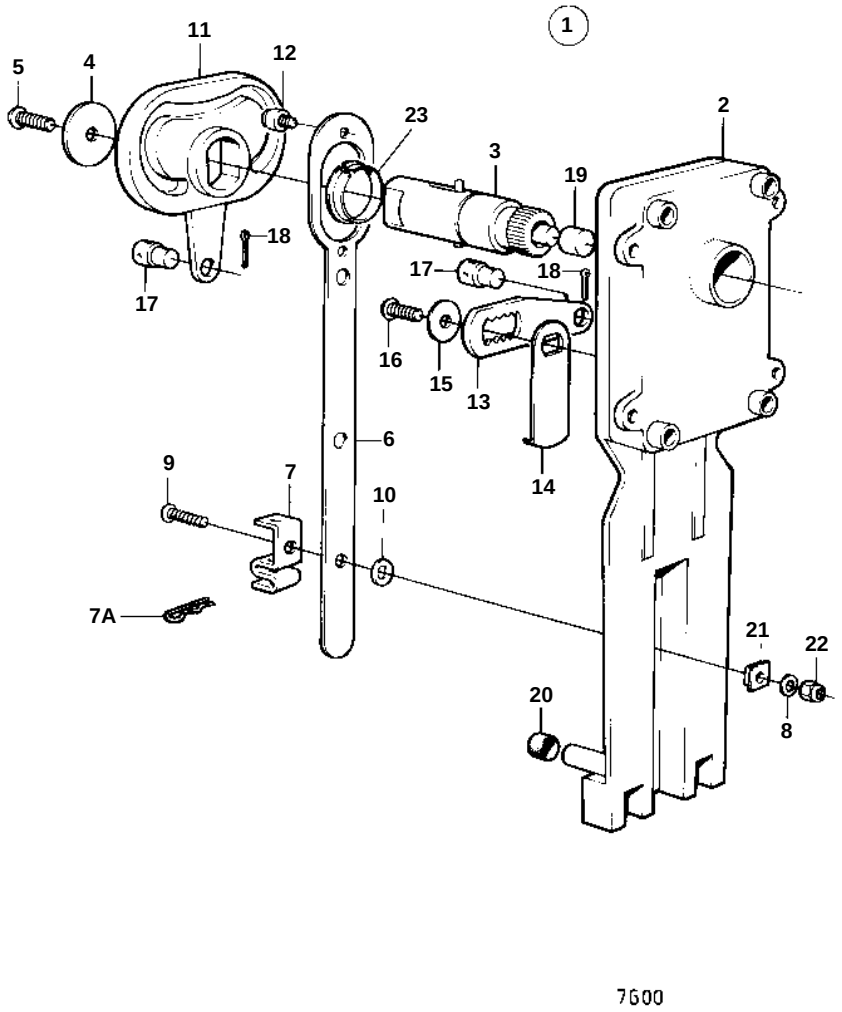

REF	PART NO.	QTY	DESCRIPTION
1	851601	1	Control
7	853423	1	· Retainer
7A	852924	1	· Clip
17	839638	2	· Cube
18	17253	2	· Split pin