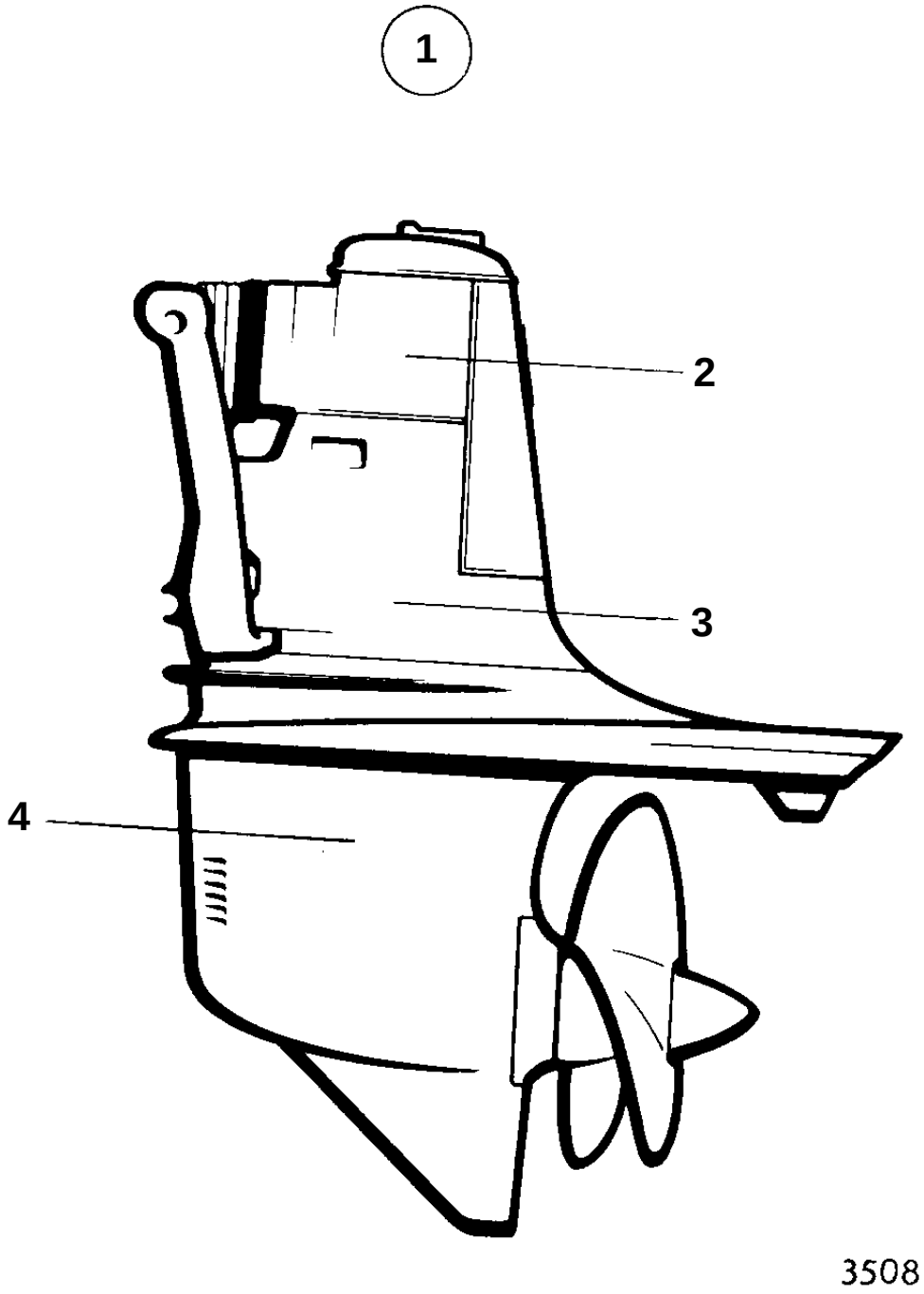
1
2
3
4
3508

| REF | PART NO. | QTY | DESCRIPTION | SEE SEC. | NOTES |
|---|---|---|---|---|---|
| 1 | 853068 | 1 | Drive | | REPLACED BY DRIVE UNIT SP-A 854015 |
| 2 | 853070 | 1 | · Upper gear | 17394 | |
| | | | | | REPLACED BY UPPER GEAR UNIT 854022,COVER 854036, SCREW 941816 AND DECAL 854144. |
| 3 | | 1 | · · INTERM HOUSING | 17399 | |
| 4 | 851875 | 1 | · · Lower gear | 17400 | |
| | 875192 | 1 | Gasket kit | | SEE GROUP 10A |