WATER HEATER AND INSTALLATION COMPONENTS: 1144069

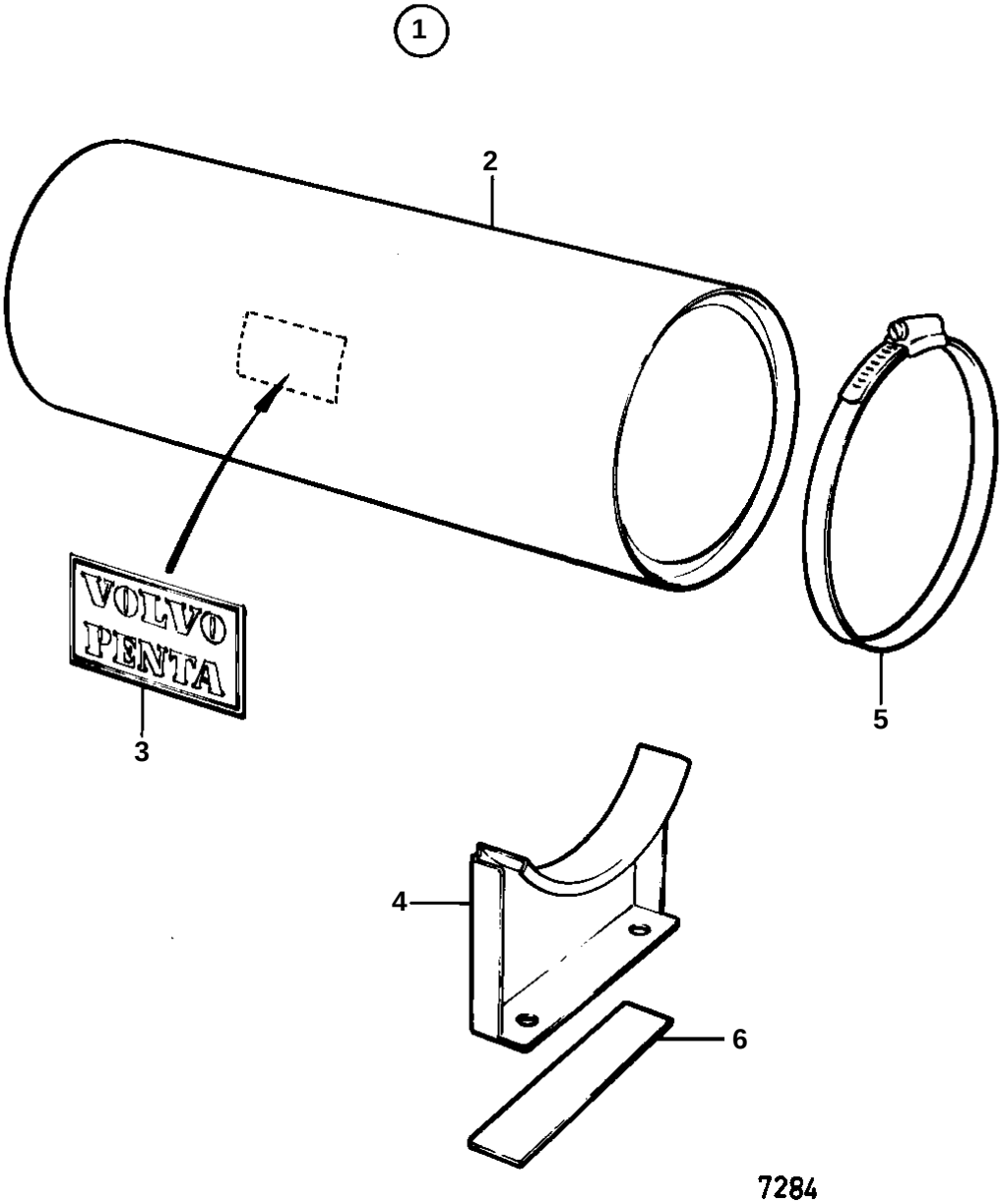

REF	PART NO.	QTY	DESCRIPTION	
1	1144069	1	Water heater	
2		1	· CONTAINER	
3	827259	1	· Label	
4	842767	2	· Bracket	
5	1144071	2	· Hose clamp	
6	1144070	2	· Spacer	