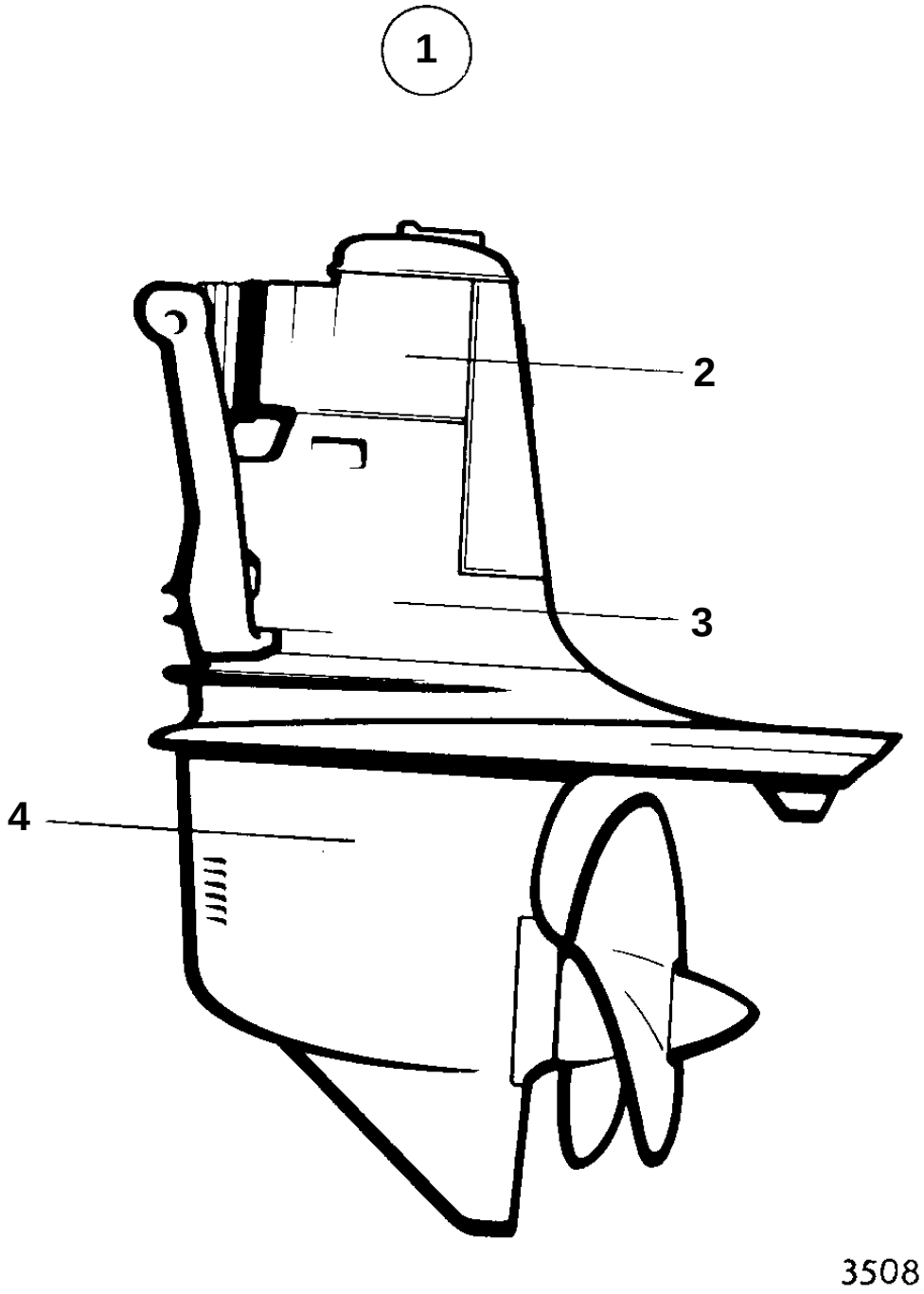
1
2
3
4
3508

REF	PART NO.	QTY	DESCRIPTION	SEE SEC.	NOTES
1	853363	1	Drive		REPLACED BY 852161 + 875828., RATIO 1,61:1
2		1	· UPPER GEAR UNIT	17105	
3		1	· INTERM HOUSING	17108	
4		1	· LOWER GEAR UNIT	17111	
	875192	1	Gasket kit		SEE GROUP 10