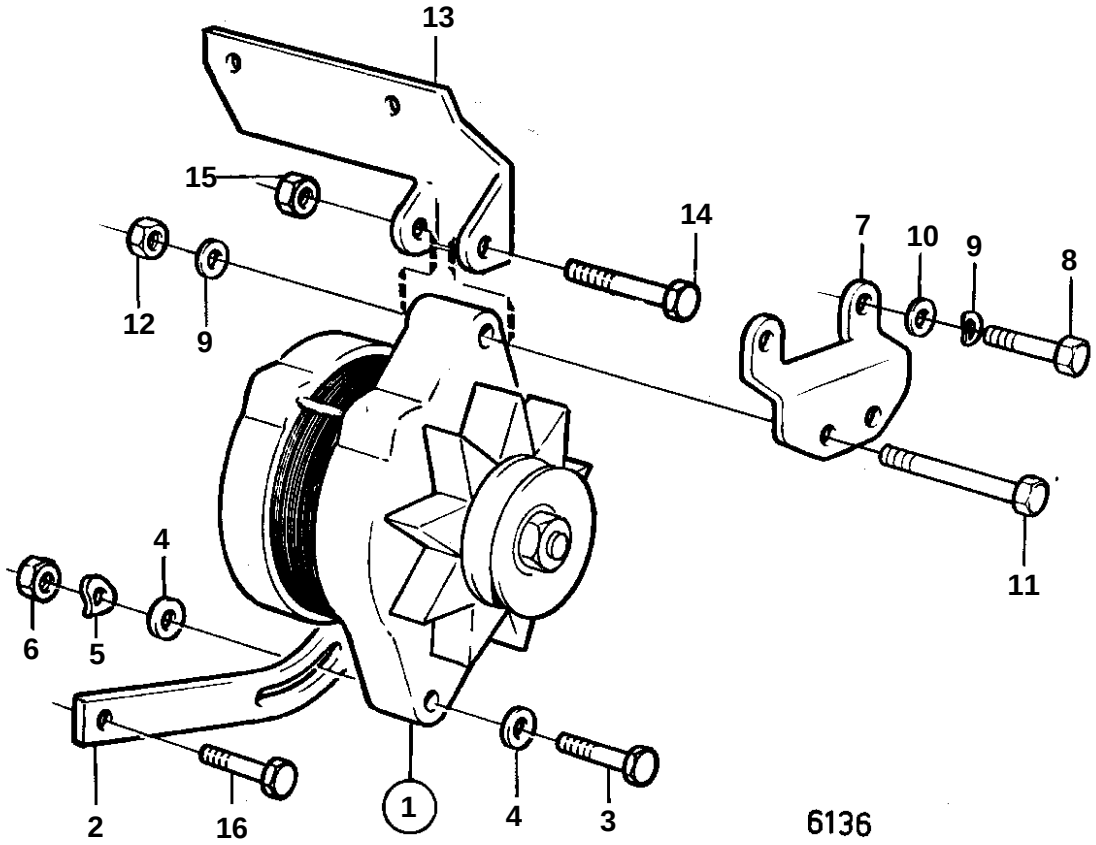
13
15
14
7
10
9
8
12
9
4
11
6
5
2
16
1
4
3
6136

REF	PART NO.	QTY	DESCRIPTION		SEE SEC.	NOTES
1	826495	1	Alternator			35A REPL BY 841769
					030-0400	
	841769	1	Alternator			35A. FOR ENGINE WITH OPPOSITE ROTATION.
			Bulletin 49-04		49-04-EN	Alternators
1					030-0400	
	841765	1	Alternator			50A
					030-0450	
2	835352	1	Tensioner			
3	940161	1	Screw			
4	191172	2	Washer			
5	941907	1	Spring washer			
6	955826	1	Nut			
13	835913	1	Bracket			
14	955700	1	Screw			L = 83 MM
15	950375	1	Nut			
16	941939	1	Screw			