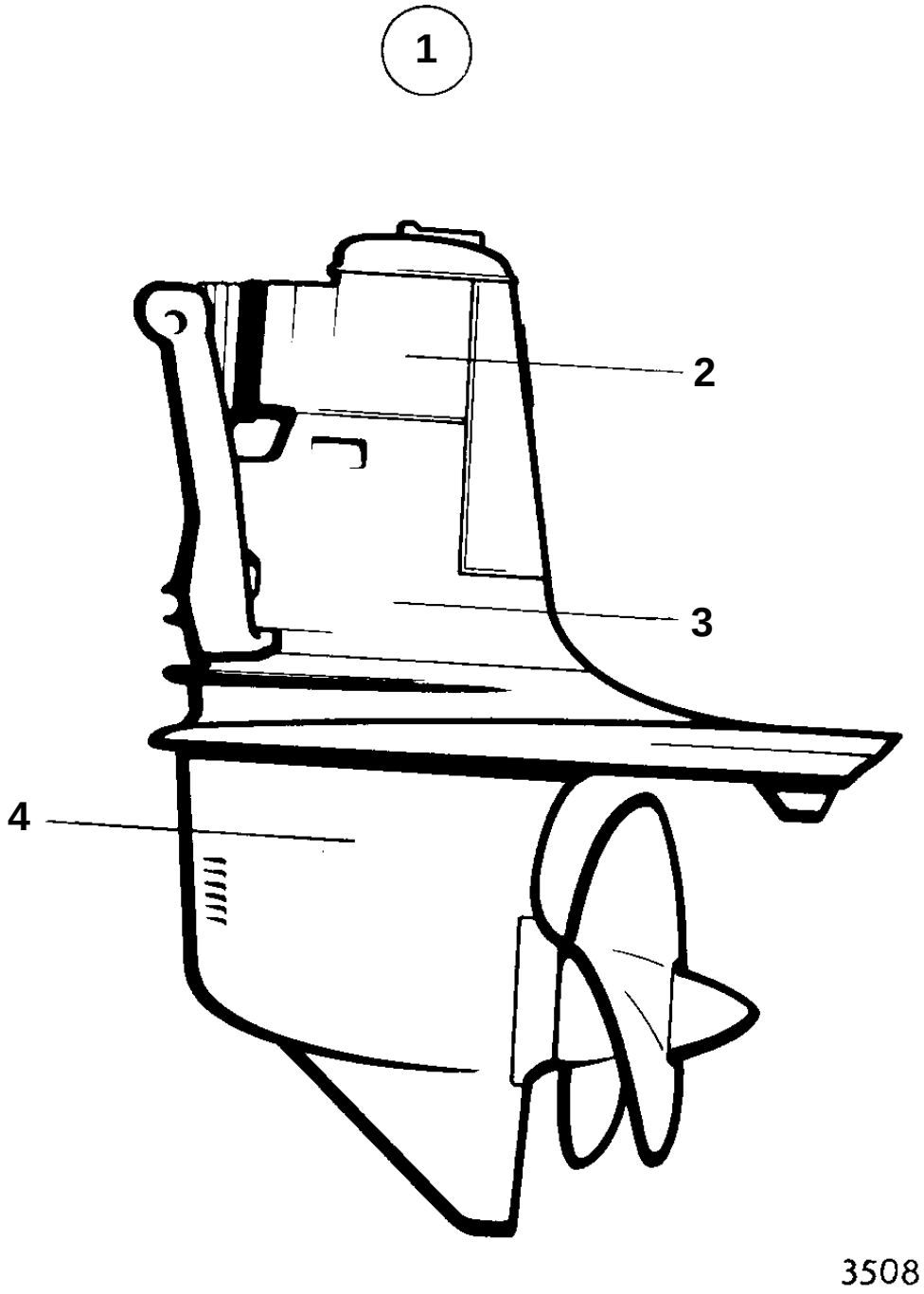
1
2
3
4
3508

REF	PART NO.	QTY	DESCRIPTION		SEE SEC.	NOTES
1	853575	1	Drive			RATIO 2,15:1
2	853070	1	· Upper gear unit		04C-0550	
3		1	· INTERM HOUSING		04C-0600	
4		1	· LOWER GEAR UNIT		04C-0725	
	875192	1	Gasket kit			SEE GROUP 10A