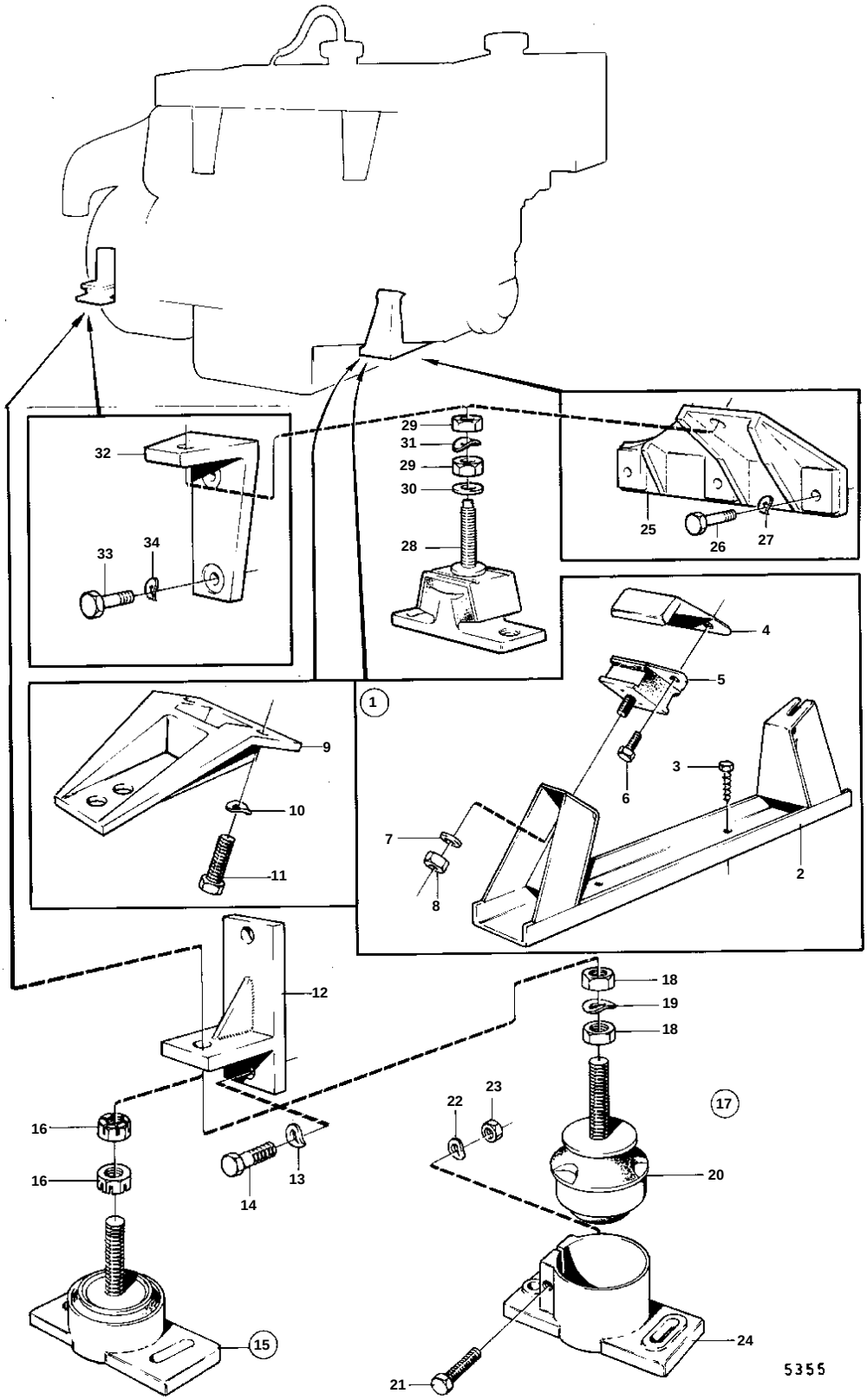
32
33
34
29
31
29
30
28
25
26
27
4
5
1
9
10
11
3
6
7
8
2
12
18
19
18
17
22
23
16
16
13
14
20
15
24
21
5355

REF	PART NO.	QTY	DESCRIPTION		NOTES
1	875261	1	Engine bracket		
2	817919	1	· Engine bracket		
3	905548	3	· Screw		
4	818073	1	· Protecting plate		
5	818072	2	· Rubber cushion		
6	955296	4	· Screw		
7	960143	2	· Washer		
8	963107	2	· Nut		
26	955297	6	Screw		L = 25 MM. FORGED PISTONS.
	955298	2	Screw		L = 40 MM. FORGED PISTONS.
27	941907	9	Spring washer		FORGED PISTONS.