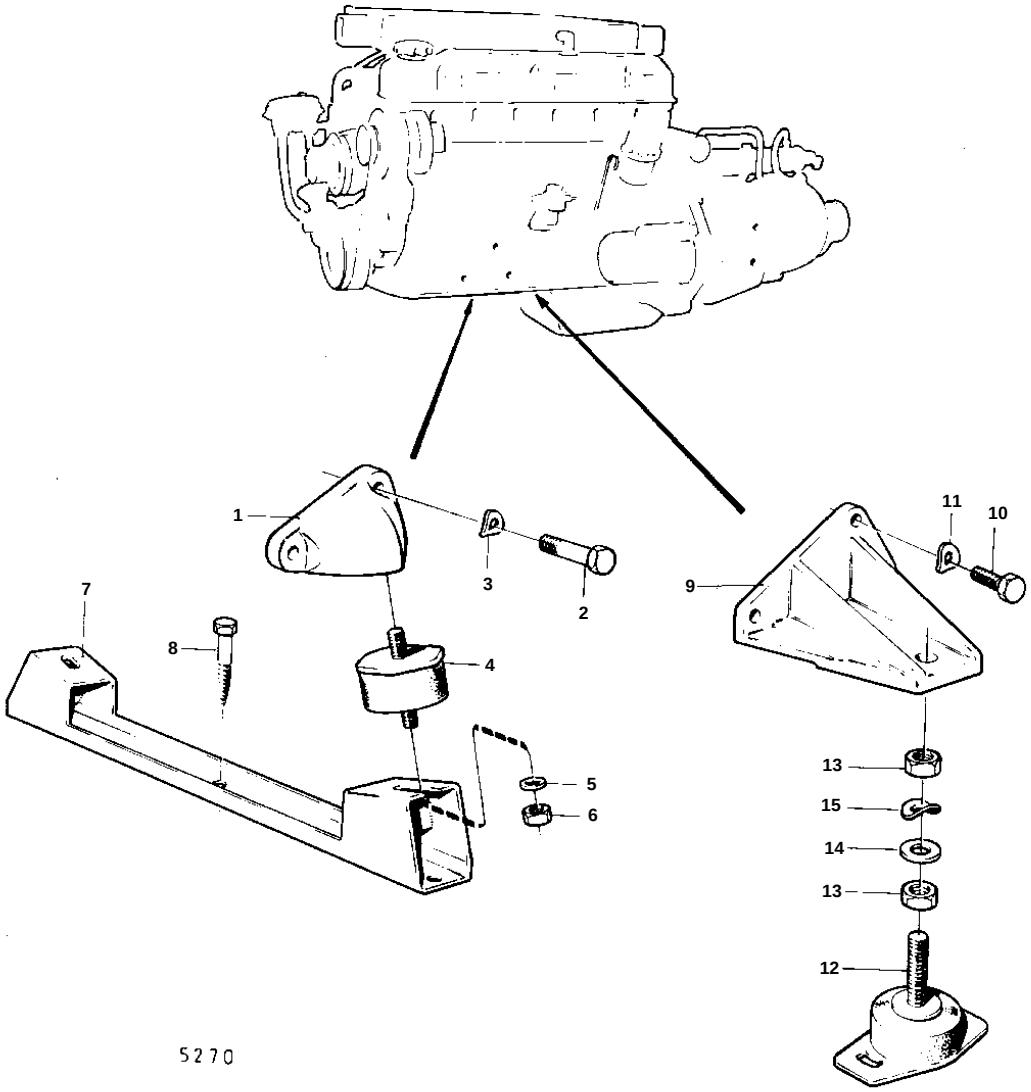
1
2
3
4
5
6
7
8
9
10
11
12
13
14
15
13
5270

REF	PART NO.	QTY	DESCRIPTION		NOTES
1	831099	1	Engine bracket		P
	831098	1	Engine bracket		S.B
2	942900	6	Screw		
3	941907	6	Spring washer		
4	682694	2	Rubber cushion		
5	960144	2	Washer		
6	950355	2	Nut		
7	820293	1	Engine bracket		
8	905548	3	Screw		