INSTALLATION KIT FOR MUFFLER: 740A/MS5

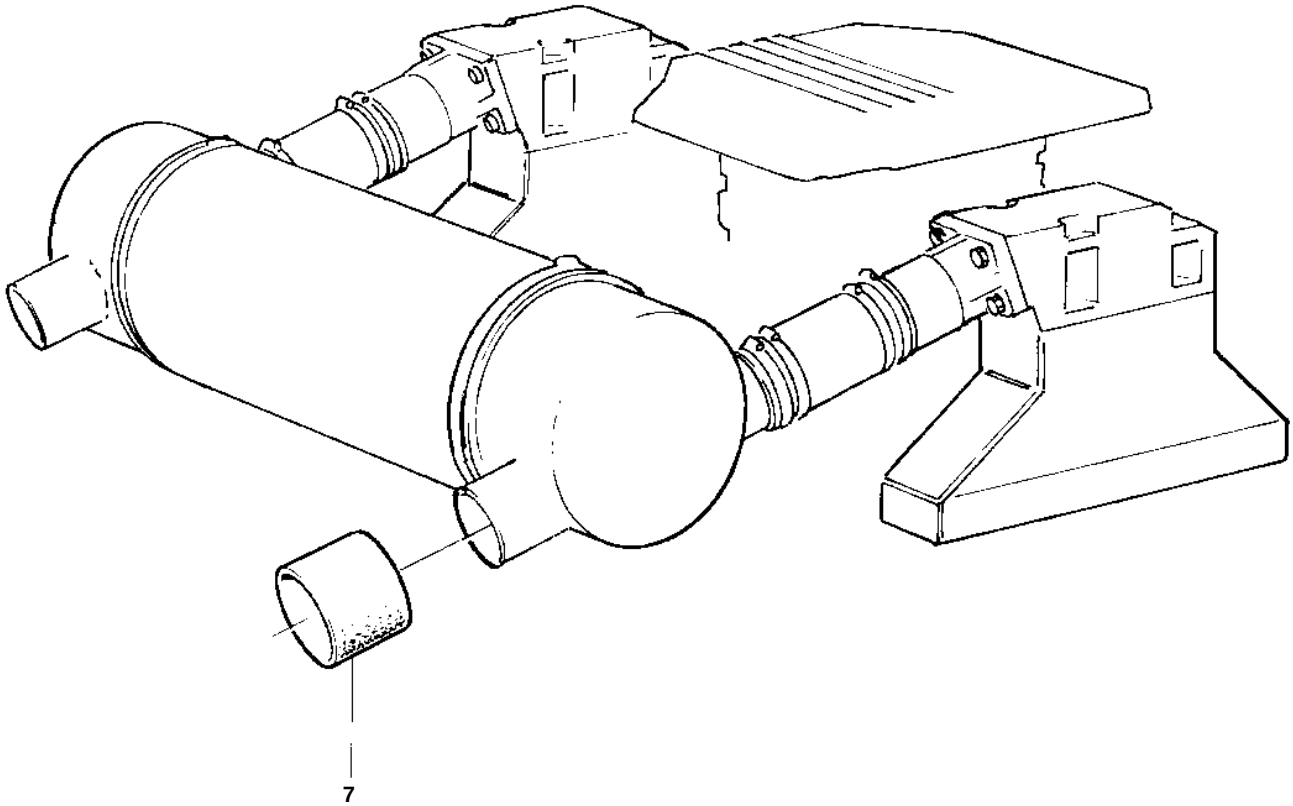

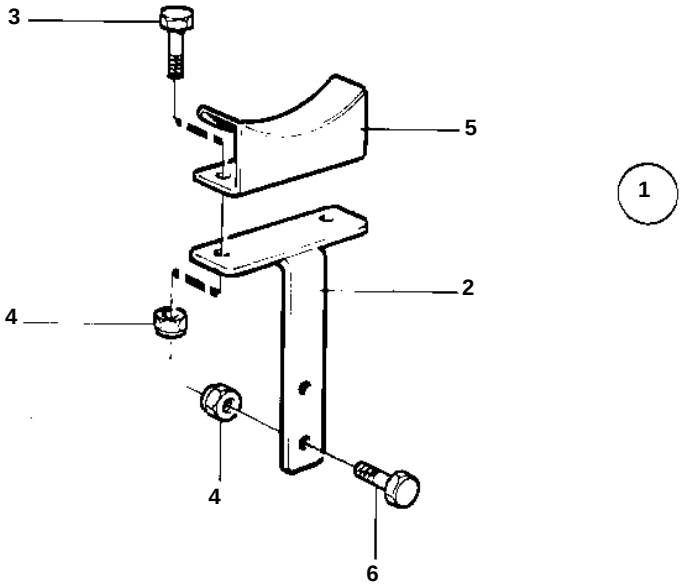

9912

REF	PART NO.	QTY	DESCRIPTION
1		1	Mounting kit
2	854519	2	· Bracket
3	940142	4	· Hexagon screw
4	963106	8	· Lock nut
5	842767	2	· Bracket
6	955295	4	· Hexagon screw
7	854551	2	· Exhaust hose