EXHAUST OUTLET AND EXHAUST LINE: 854516

740A

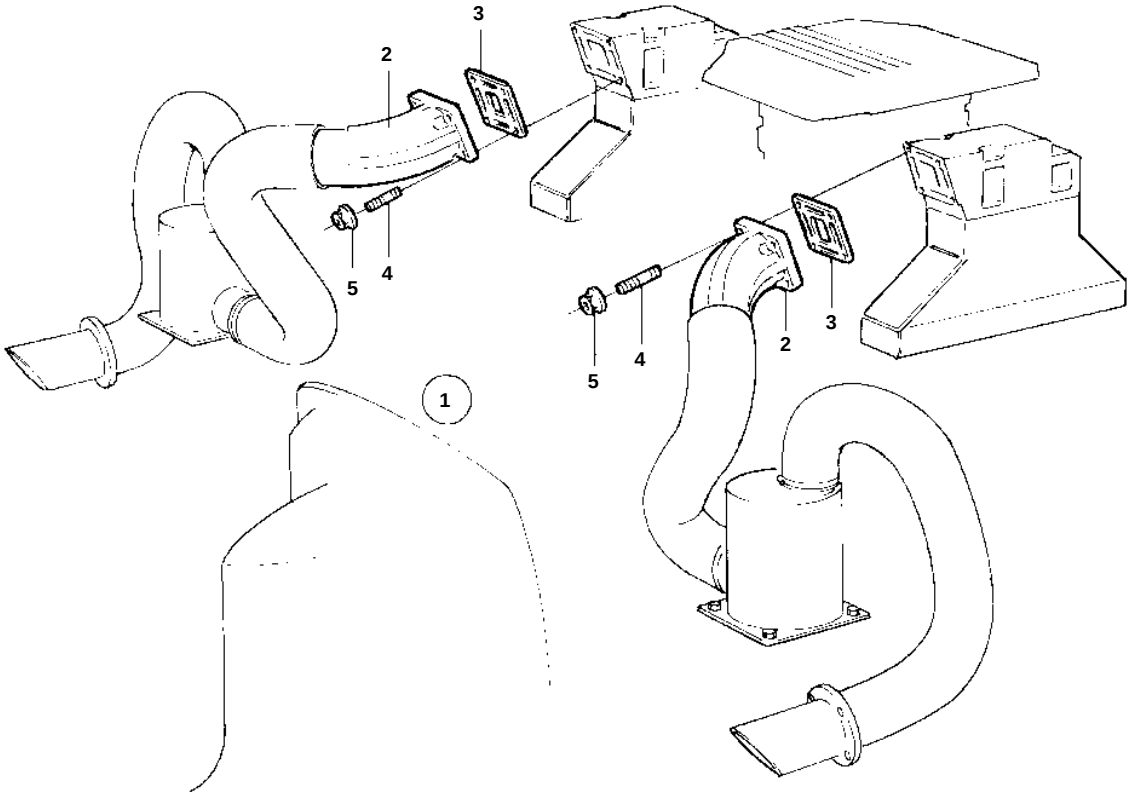

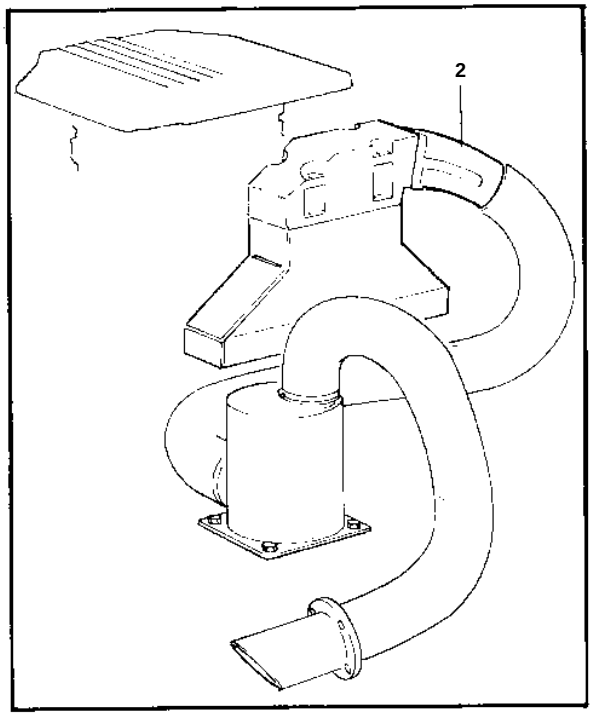

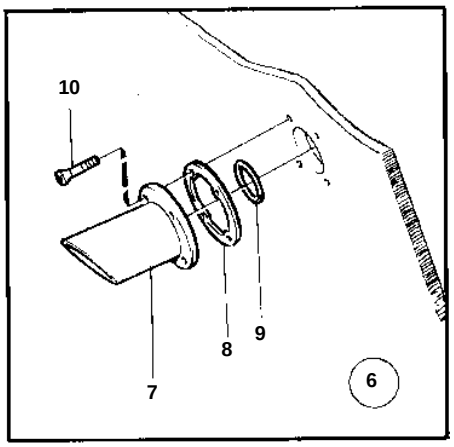

740A

REF	PART NO.	QTY	DESCRIPTION	NOTES
1		1	Exhaust outlet	
2		2	· Exhaust outlet	(856436)
3	856429	2	· Gasket	
4	924077	8	· Stud	
5	971095	8	· Flange nut	