7.4GiPEFS, 7.4GSiPEFS, 8.2GSiPEFS, DPX385XEFS, DPX415XEFS

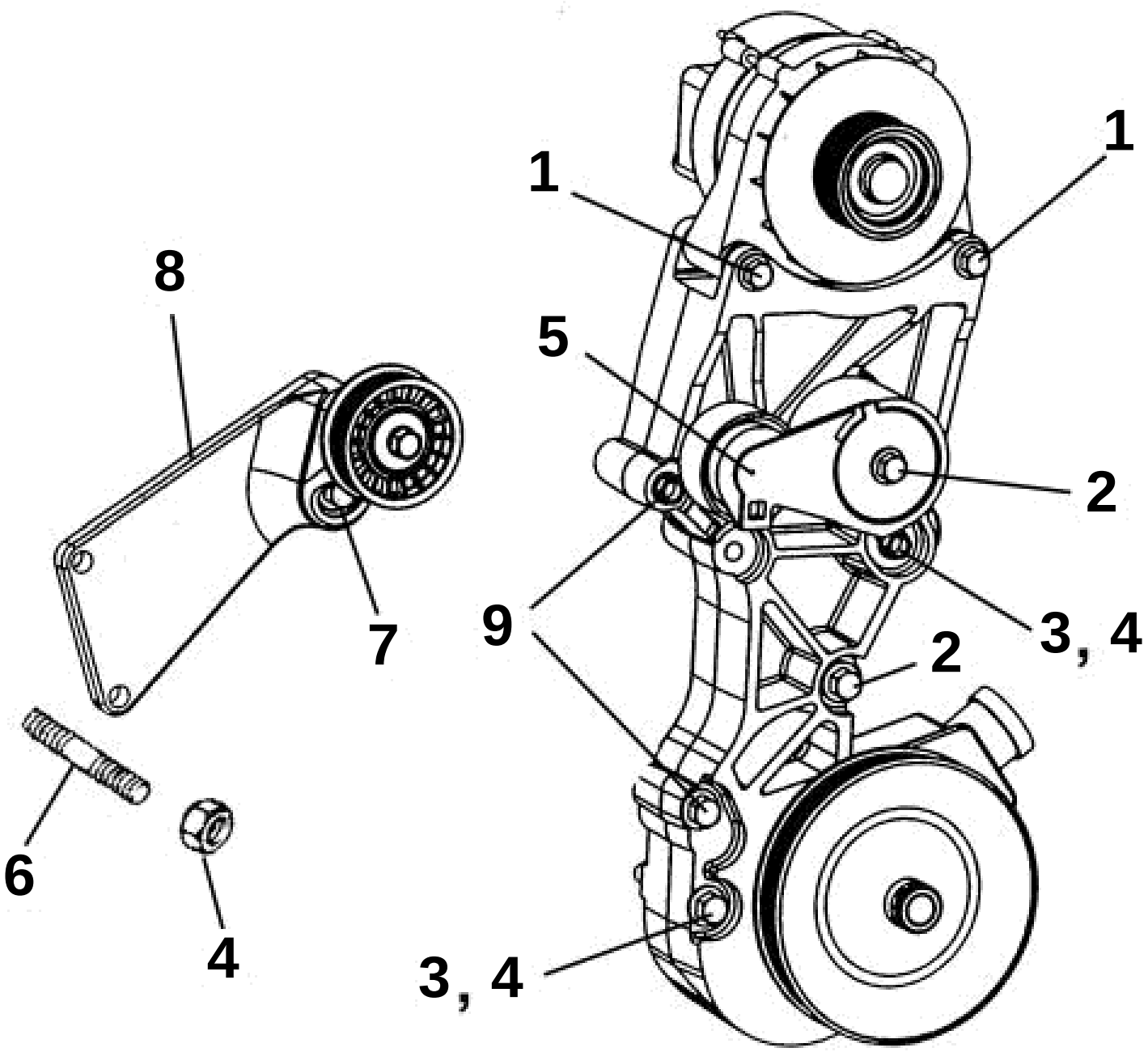

7.4GiPEFS, 7.4GSiPEFS, 8.2GSiPEFS, DPX385XEFS, DPX415XEFS

REF	PART NO.	QTY	DESCRIPTION
1	3853367	2	Screw, Alternator
2	3860281	1	Screw, Tensioner
3	3860476	2	Stud, Bracket & bushing assy to engine
4	3853273	3	Nut, Stud bracket & bushing assy
5	3860079	1	Belt tensioner, Suspension belt
6	3860405	2	Stud, Idler bracket to head
7	3855595	1	Screw, Idler bracket to head
8	3860269	1	Bracket
9	3860281	3	Screw, Bracket & bushing assy to engine