7.4GiPEFS, 7.4GSiPEFS, 8.2GSiPEFS, DPX385XEFS, DPX415XEFS

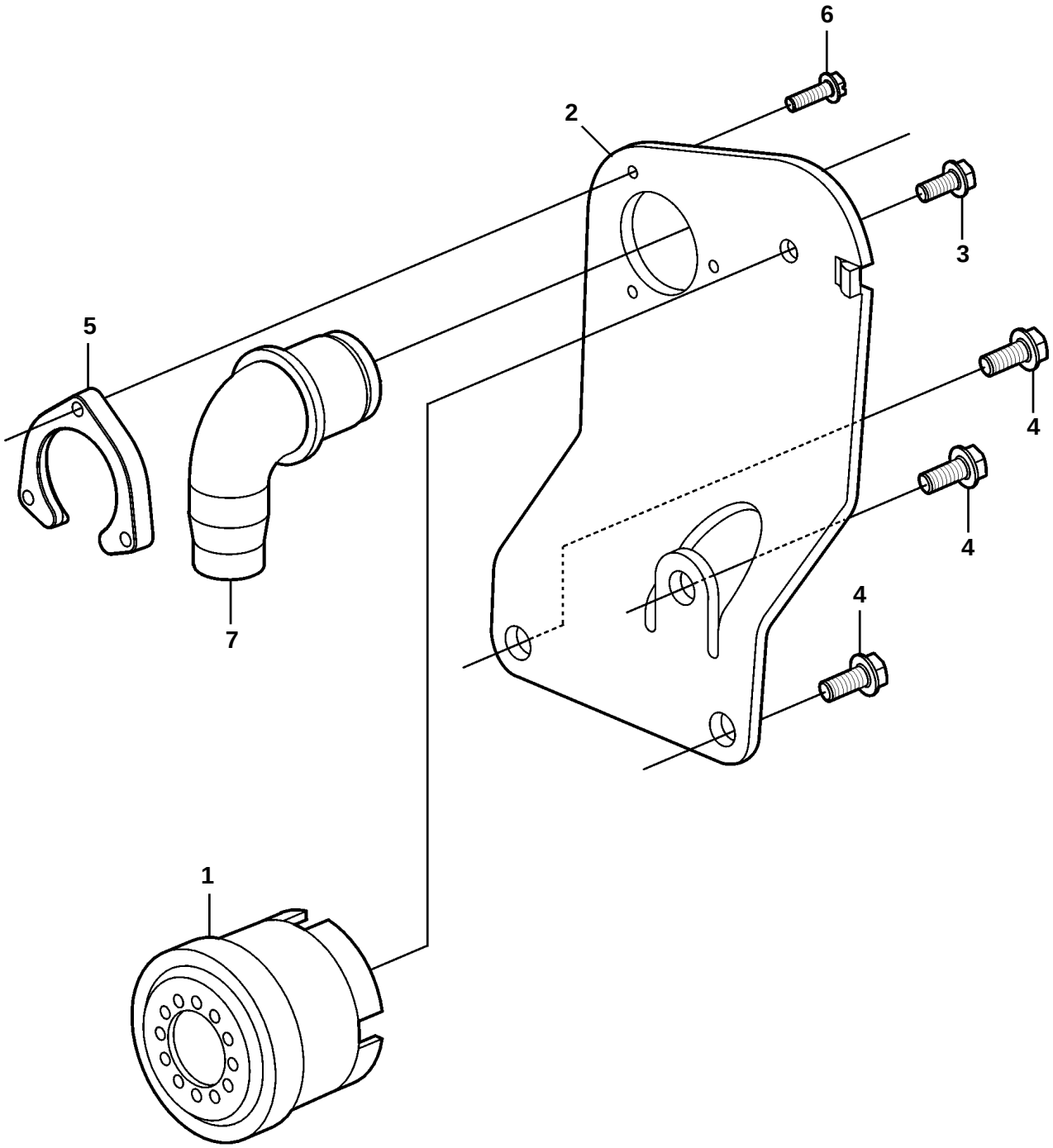

12629

7.4GiPEFS, 7.4GSiPEFS, 8.2GSiPEFS, DPX385XEFS, DPX415XEFS

REF	PART NO.	QTY	DESCRIPTION	NOTES
1	3860264	1	Horn	
2	3860164	1	Bracket, Alarm & 10 pin	
	965175	1	Flange screw, Alarm to bracket	Not shown
3	3853326	3	Screw, Alarm bracket to head	
4	3852825	1	Retainer, For 10 pin	
5	3852208	3	Screw, Retainer, engine cable end to bracket	