DISTRIBUTOR: 855932

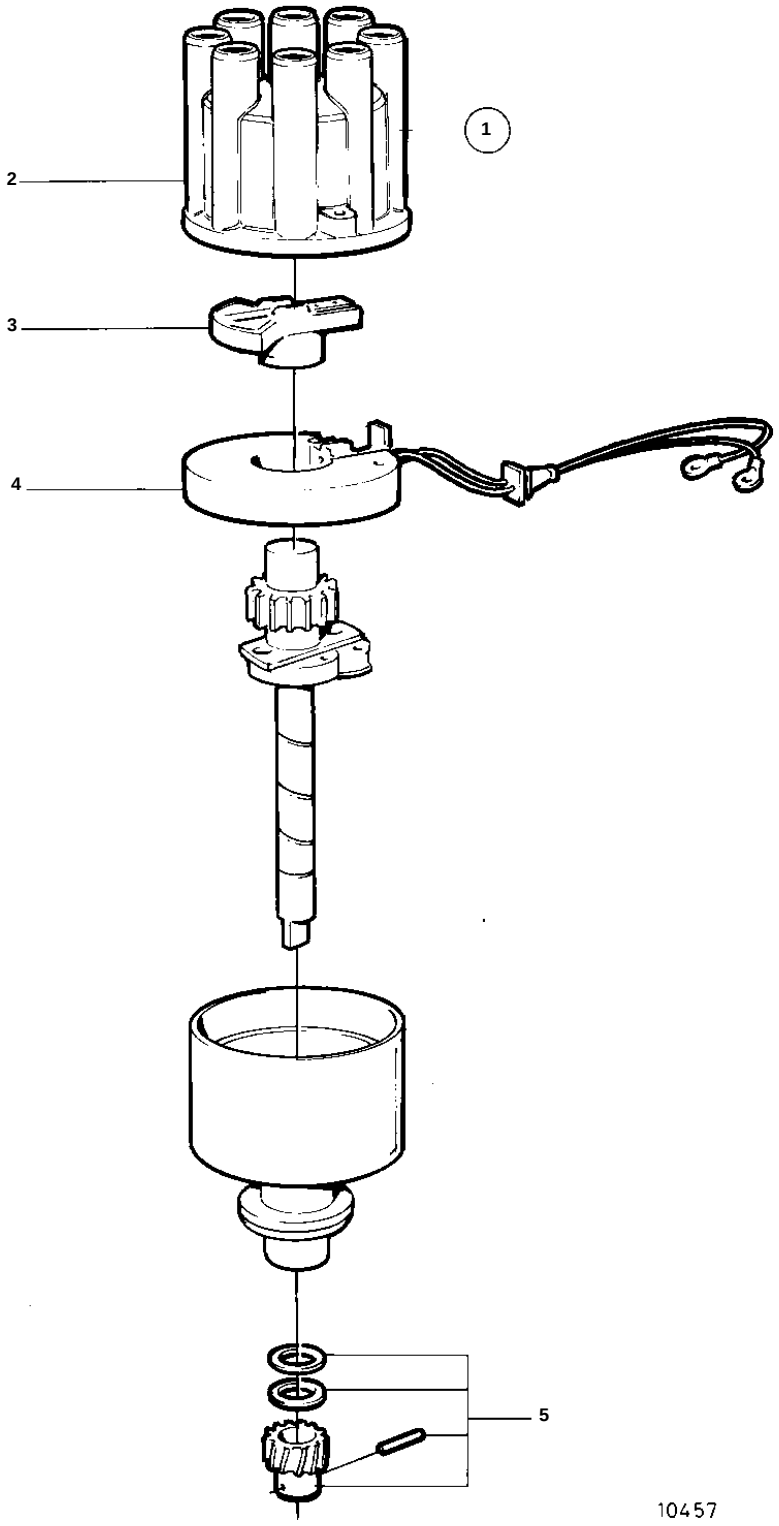

DISTRIBUTOR: 855932

REF	PART NO.	QTY	DESCRIPTION	
1	855932	1	Distributor	
2	841070	1	· Cover	
3	855845	1	· Rotor	
4	855910	1	· Sender	
5	841295	1	· Overhaul kit	