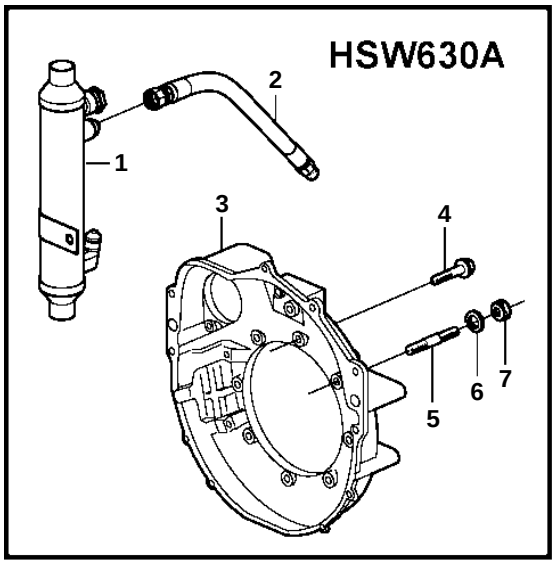
HSW630A
1
2
3
4
5
6
7

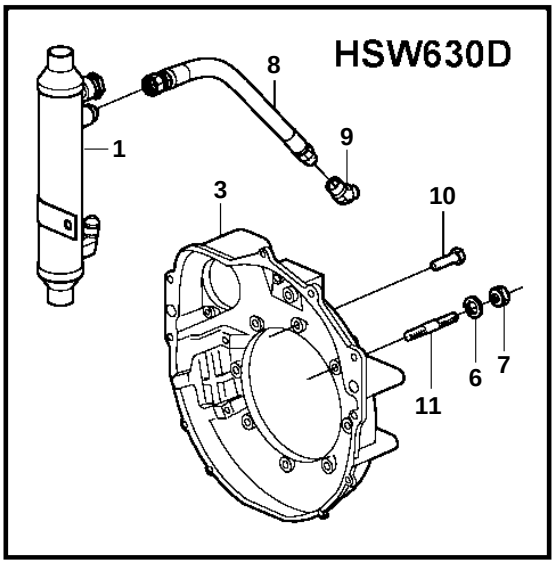
HSW630D
1
3
6
7
8
9
10
11

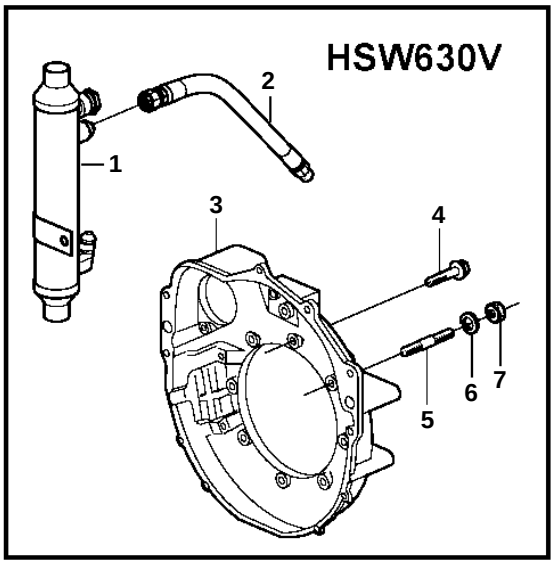
HSW630V
1
2
3
4
5
6
7

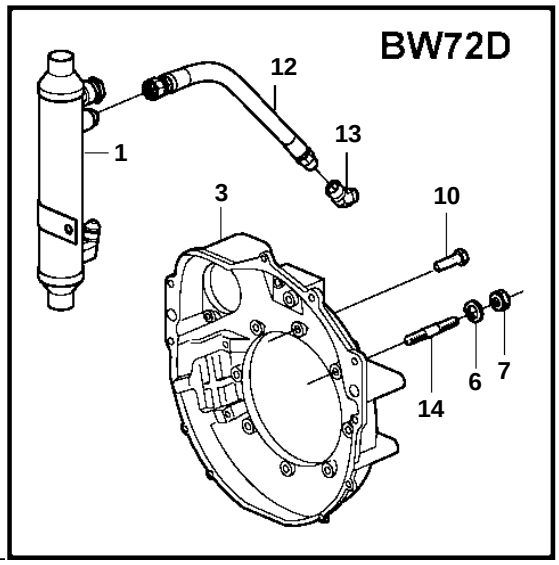
BW72D
1
3
6
7
10
12
13
14

22987

| REF | PART NO. | QTY | DESCRIPTION |
|---|---|---|---|
| 9 | 191114 | 1 | Elbow nipple |
| 10 | 955556 | 2 | Hexagon screw |