5.0GXi-G, 5.0GXi-GF, 5.0OSi-G, 5.0OSI-GF

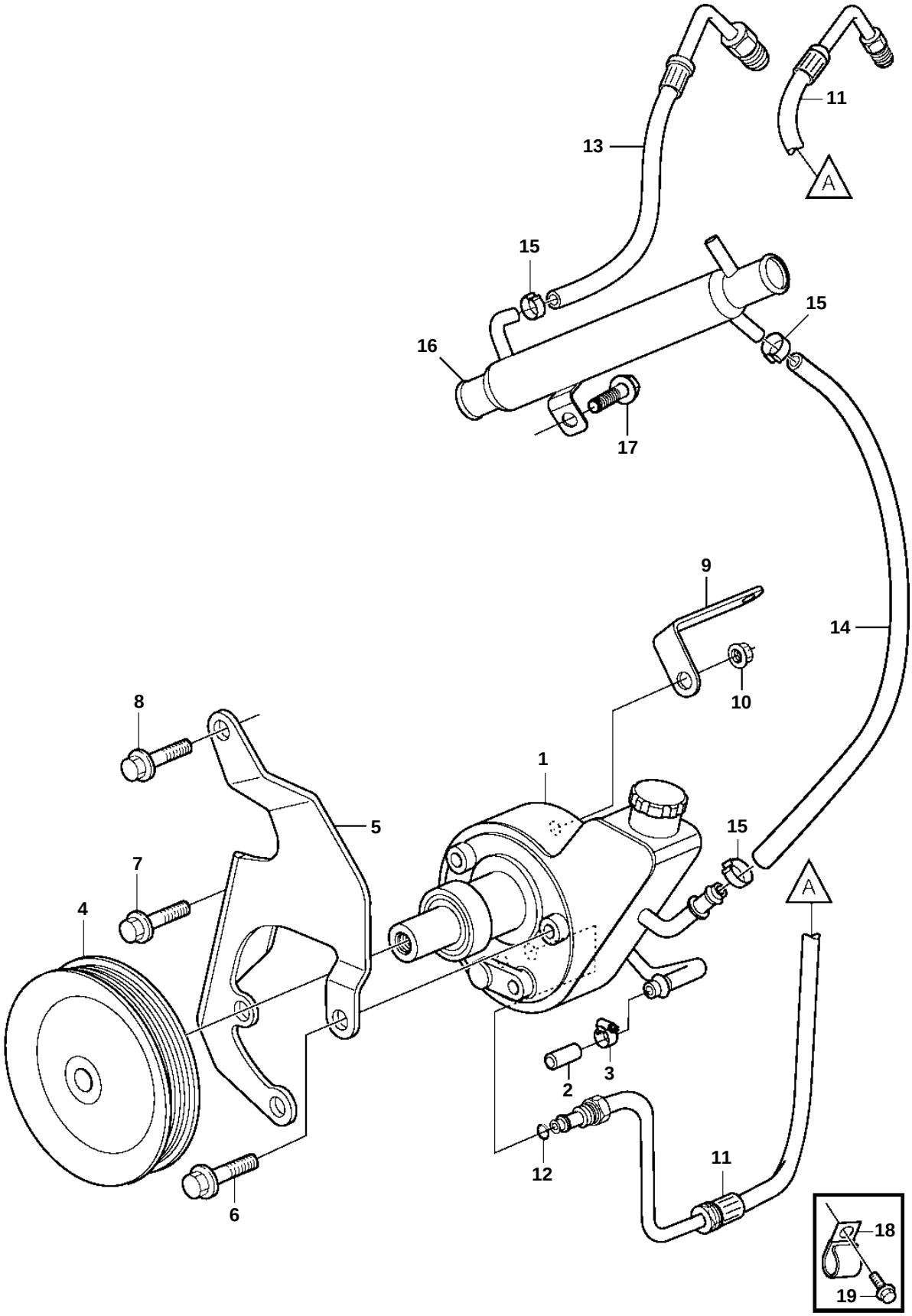

22131

5.0GXi-G, 5.0GXi-GF, 5.0OSi-G, 5.0OSI-GF

REF	PART NO.	QTY	DESCRIPTION
1	3860871	1	Pump
2	3856766	2	Cardboard tube
3	3860413	2	Hose clamp
4	3888078	1	Pulley
5	3817841	1	Bracket
6	3853405	3	Screw
7	3853557	1	Screw
8	3853405	1	Screw
9	3843928	1	Bracket
10	971098	1	Flange lock nut
11	3863145	1	Hose
12	3852497	1	O-ring
13	3863148	1	Hose
14	3863008	1	Hose
15	982663	3	Hose clamp
16	3862629	1	Oil cooler
17	3860582	1	Screw
18		1	Clamp
19	3853392	1	Screw