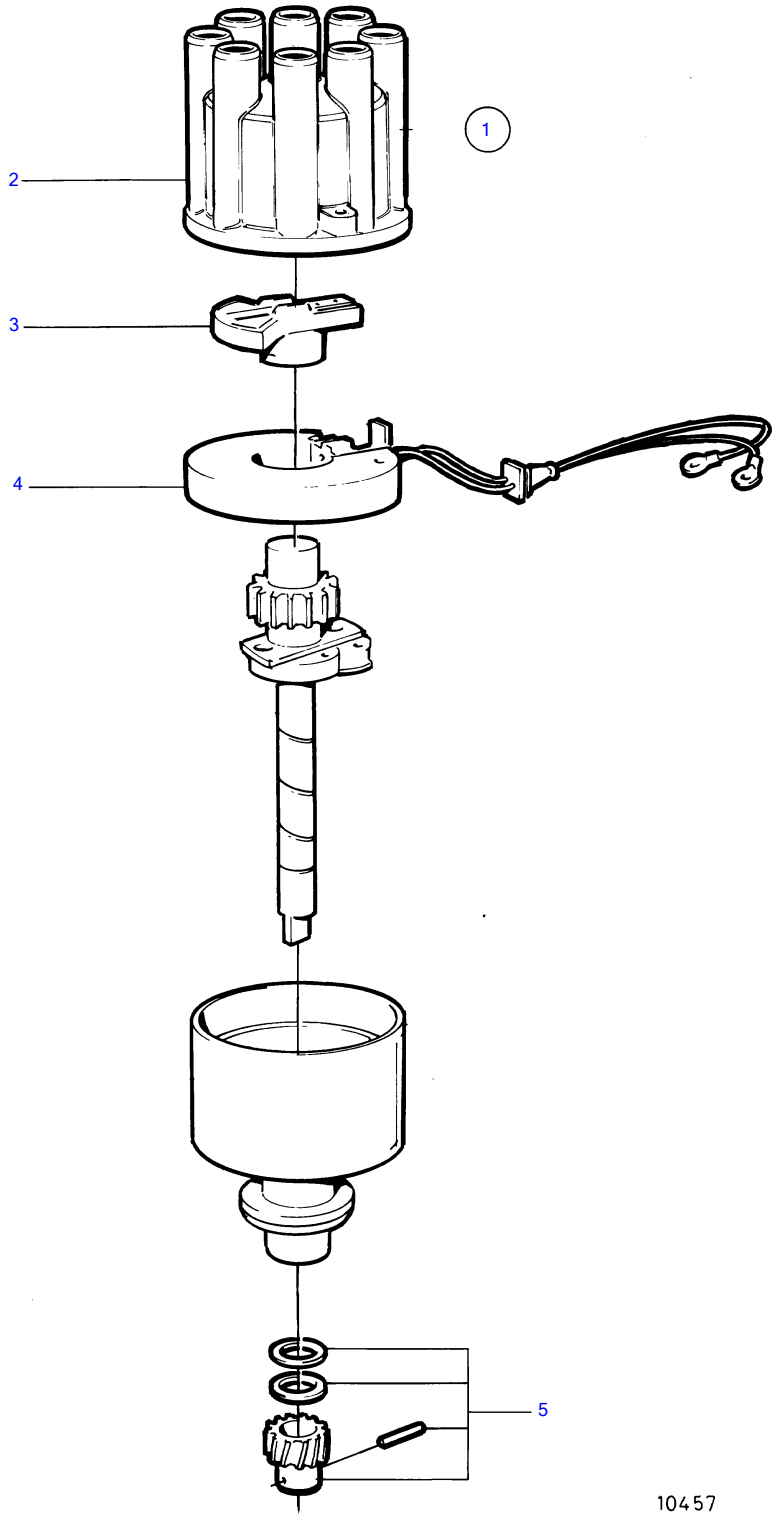
1
2
3
4
5
10457

REF	PART NO.	QTY	DESCRIPTION	NOTES
1	(856975)	1	Distributor	Obsolete part
2	841070	1	▪ Cover	
3	855845	1	▪ Rotor	
4	855910	1	▪ Sensor	
5	841295	1	▪ Overhaul kit	