4.3GLPLKD, 4.3GLPLKE, 4.3GSPLKD, 4.3GSPLKE, 4.3GIPLKDCE, 4.3GIPLKECE, 4.3GSJLKD

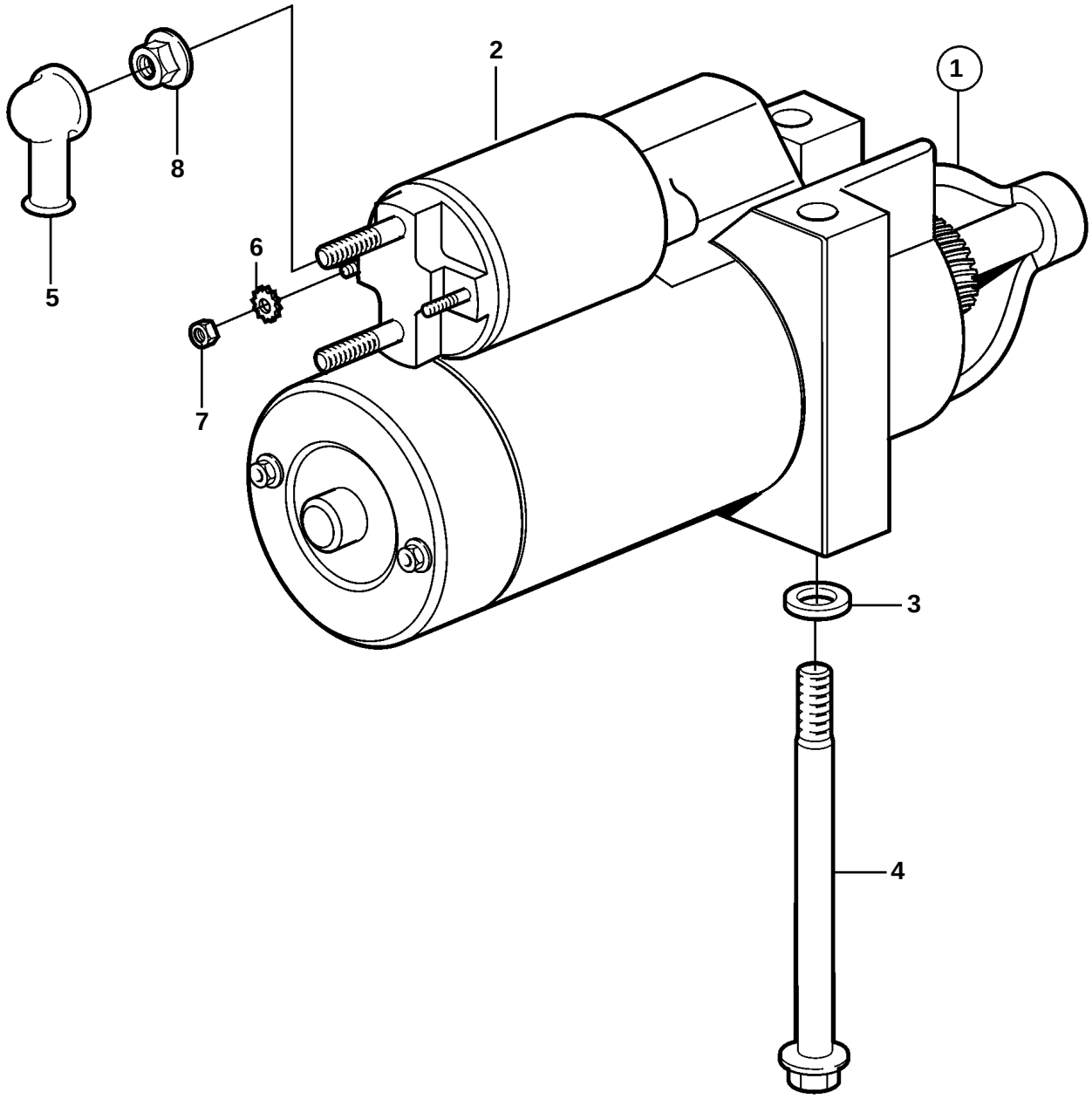

19425

4.3GLPLKD, 4.3GLPLKE, 4.3GSPLKD, 4.3GSPLKE, 4.3GIPLKDCE, 4.3GIPLKECE, 4.3GSJLKD

REF	PART NO.	QTY	DESCRIPTION
1	3856004	1	Starter motor, Engine
2	3850216	1	· Solenoid
3	3854496	2	· Washer
4	3854752	2	· Screw, Starter motor to engine
5	3852487	1	· Protective cap, Battery cable
6	3852520	2	· Washer
7	3852518	2	· Nut, Starter solenoid
8	3853714	1	· Nut, Battery cable to starter solenoid