230A, 230B

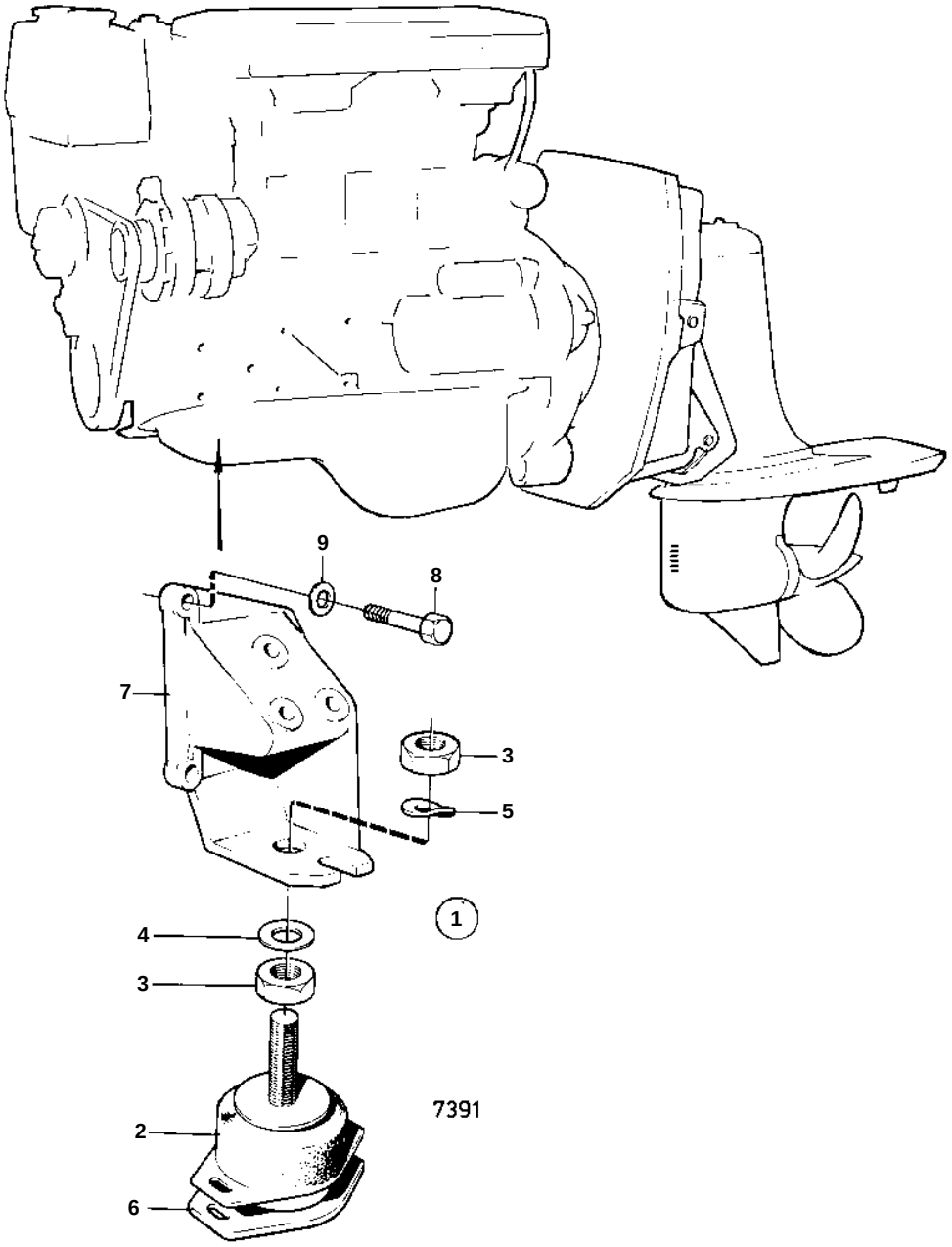

230A, 230B

REF	PART NO.	QTY	DESCRIPTION	NOTES
1	834353	1	Rubber cushion	
2	833926	2	· Rubber cushion	
3	955805	4	· Hexagon nut	
4	955900	2	· Washer	
5	941912	2	· Spring washer	
6	834463	2	· Washer	
7	831973	1	Engine bracket	P
		1	Bracket	S.B
8	968895	3	Flange screw	P
	955305	3	Hexagon screw	S.B
9	955894	3	Washer	S.B