230A, 230B

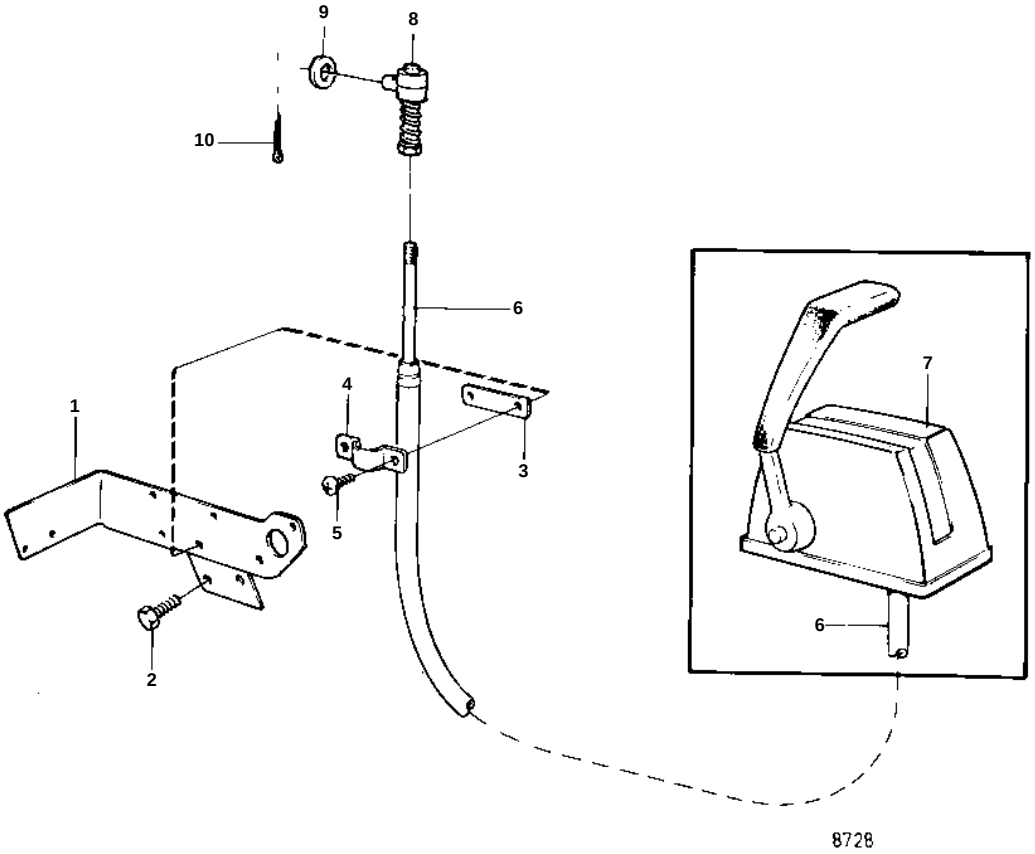

230A, 230B

REF	PART NO.	QTY	DESCRIPTION	NOTES
1	855268	1	Bracket	
2	966378	2	Flange screw	
3	819068	1	Washer	
4	21471054	1	Bracket	
5	946753	2	Cross recessed screw	
6		X	CONTROL CABLE	SEE GROUP 9
7		X	CONTROL	SEE GROUP 9
8	841275	1	Cube	
9	940191	1	Washer	
10	17276	1	Split pin	